Clarion Co., Ltd.
Export Division—22-3, Shibuya 2-chome, Shibuya-ku, Tokyo, 150 Japan
Tel: 03-400-1121 Fax: 03-400-8679 Telex: J22908, J22152
Service Dept.—50 Kamitoda, Toda-shi, Saitama, 335 Japan Tel: 0484-43-1111 Telex: J2962628 CLAFAC-J

Clarion

Service Manual

BUS MULTI SYSTEM

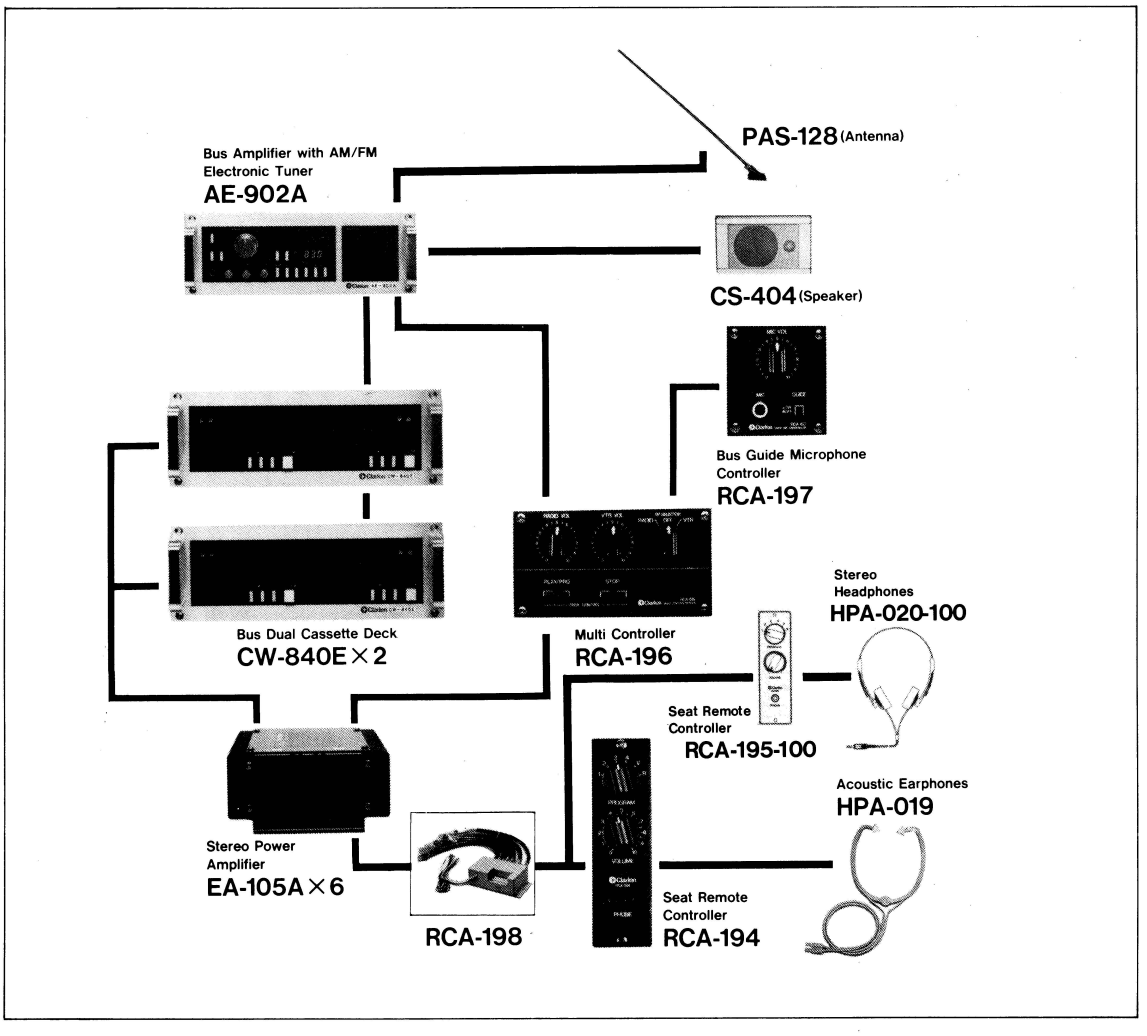

■COMPONENTS:

Amplifier with AM/FM Electronic Tuner	AE-902A-01	1	P. 6
Dual Cassette Deck	CW-840E-01	2	P. 14
Stereo Power Amplifier	EA-105A-01	6	P. 3
Multi Controller	RCA-196-100	1	P. 21
Microphone Control Unit	RCA-197-100	1	P. 25
(Multi Seat Remote Control Units	RCA-195-100	As required	
\Stereo Headphones	HPA-020-100		
(Multi Seat Remote Control Units	RCA-194-100	As required	
\Acoustic Earphones	HPA-019-101		
Terminal Board	RCA-198-100	1	P. 24
Internal Speaker	CS-404A-01	4—12pairs	
External Speaker	SPA-806-101	1	
Antenna	PAS-128-100	1	
Junction Cable (Seat Front-Rear)	CCA-054-100 (2m)	As required	
	CCA-055-100 (3m)	As required	
Junction Terminal Board (Seat-Remocon)	CCA-106-100	As required	
Microphone	DMA-170-100	As required	
Microphone Cord	MCA-024-101 (2m)		
	MCA-025-101 (3m)		

■WIRE CONNECTION:

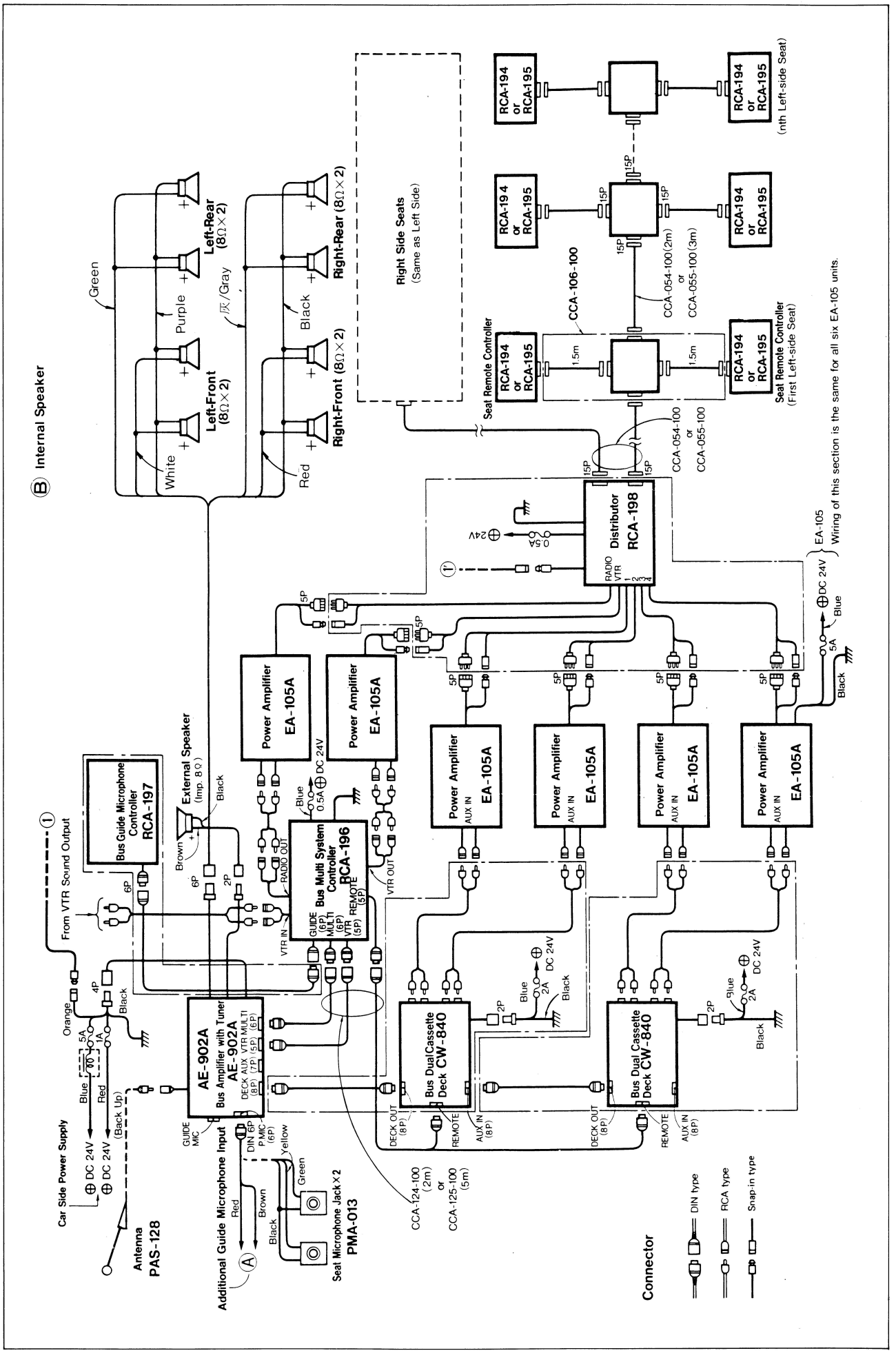

■MAIN FUNCTIONS:

❶ The seat remote control units can be used for providing each seat with stereo sound from a total of six sources, consisting of four tape channels, one VTR channel, and one radio channel.
❷ Audio sources input through the AE902A can be played over the loudspeakers. These sources include the microphone, radio, VTR and tape (with the output switches on the cassette decks' front panel turned on).
❸ The Multi system is used with the radio switch on the AE902A front panel in the OFF position, and the switches on the multi controller are used to select the radio or VTR for playing over the loudspeakers.
❹ When using the system as described above, the volume control on the bus amplifier's front panel is used as the master volume control. This control is set beforehand to a suitable level, then the separate volume controls on the Multi controller are used for volume adjustment. Left/right and front/rear balance is adjusted on the Bus amplifier's front panel.
❺ To play a tape over the loudspeakers, the output switch the cassette deck (playback) should be turned on. Volume is controlled on the AE902A front panel. When more than one output switch is on, the sources are mixed, so only the output switch on the deck which is to be used for the loudspeaker should be turned on. When using other sources (radio, VTR), the output switch on the deck should be turned off.
❻ PLAY or STOP can be controlled collectively with the Multi controller switches. The PLAY switch starts all four tapes at once, the STOP switch stops all four tapes at the same time, and the program can be switched by turning the PLAY switch on while the tape decks are running.
❼ For all of the above operations, the speaker selector switch on the AE902A front panel can be used to switch to the external loudspeaker.
❽ The guide microphone switch on either the AE902A front panel or on the microphone control unit can be used to interrupt all other programs (loudspeakers, seat remote control units) so that only the guide microphone is heard.

■Stereo Power Amplifier:
EA-105A-01

■SPECIFICATIONS:

Power output:	18W×2
Speaker impedance:	2Ω
Total harmonic distortion:	Less than 5%
Input level:	SP input level: Less than 6.5V (at 1kHz 18W) External input level: 200mV (at 1kHz 18W, Input R. 10kΩ)
Supply voltage:	DC 24V (21.6V to 31.2V)
Power dissipation:	Less than 5A
Dimensions:	Width 130mm Height 62.5mm Depth 184mm
Weight:	1.3kg

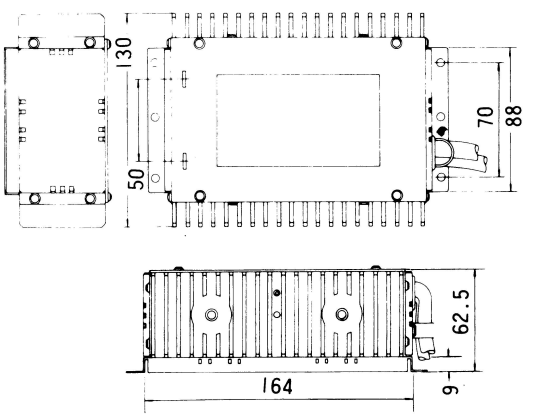

■COMPONENTS:

Main unit		1
Extension lead	852-3340-00	1
Extension lead	852-3310-00	1
Extension lead (Red)	852-6026-00	1
Booklet bag		1
Parts bag	921-1000-00	1
{ Tap screw	700-4012-10 (M4×12)	4

■PARTS LIST:

◎Electrical section P.W.B 1

REF.NO.	PART NO. (ORDER NO.)	DESCRIPTION	Q'TY
$D_{101.201}$	001-0193-01	Diode (05Z15U)	2
$IC_{101.201}$	051-0223-00	IC (TA7066P)	2
$R_{104.204}$	114-8211-52	Film resistor (1W820Ω) OM	2
$C_{103.203}$	141-1022-10	Polyester capacitor (50V0.001μF)	2
$C_{401.502}$	141-4722-10	Polyester capacitor (50V0.0047μF)	2

REF.NO.	PART NO. (ORDER NO.)	DESCRIPTION	Q'TY
$C_{102.202}$	180-1064-32	Electrolytic capacitor (VL16V10μF)	2
$C_{105.205}$	180-1074-42	Electrolytic capacitor (VL25V100μF)	2
$C_{104.204}$	180-3364-32	Electrolytic capacitor (VL16V33μF)	2
$C_{101.201}$	181-4753-42	Electrolytic capacitor (VL25V4.7μF LN) LL	2
$C_{106.206}$	181-4763-32	Electrolytic capacitor (VL16V47μF) LL	2

◎Electrical section P.W.B 2

REF.NO.	PART NO. (ORDER NO.)	DESCRIPTION	Q'TY
$T_{101.201}$	006-0930-00	Input trans	2
$VR_{109.209}$	012-3395-00	Variable resistor (4.7kΩ)	2
$Q_{103.203}$	100-0684-17	Transistor (2SA684Q)	2
$Q_{101.201}$	102-0828-39	Transistor (2SC828AQ)	2
$Q_{102.202}$	102-1384-17	Transistor (2SC1384Q)	2
$R_{111.112.211.212}$	110-2211-41	Film resistor (½W220Ω)	4

REF.NO.	PART NO. (ORDER NO.)	DESCRIPTION	Q'TY
$R_{111.112.211.212}$	114-2282-61	Film resistor (2W0.22Ω) OM	4
$C_{108.110.208.210}$	141-1222-10	Polyester capacitor (50V0.0012μF)	4
$C_{111.211}$	180-1084-42	Electrolytic capacitor (VL25V1000μF)	2
$C_{107.207}$	180-2264-42	Electrolytic capacitor (VL25V22μF)	2
$C_{109.209}$	181-4763-32	Electrolytic capacitor (VL16V47μF LN) LL	2

■EXPLODED VIEW • PARTS LIST:

◎Main section

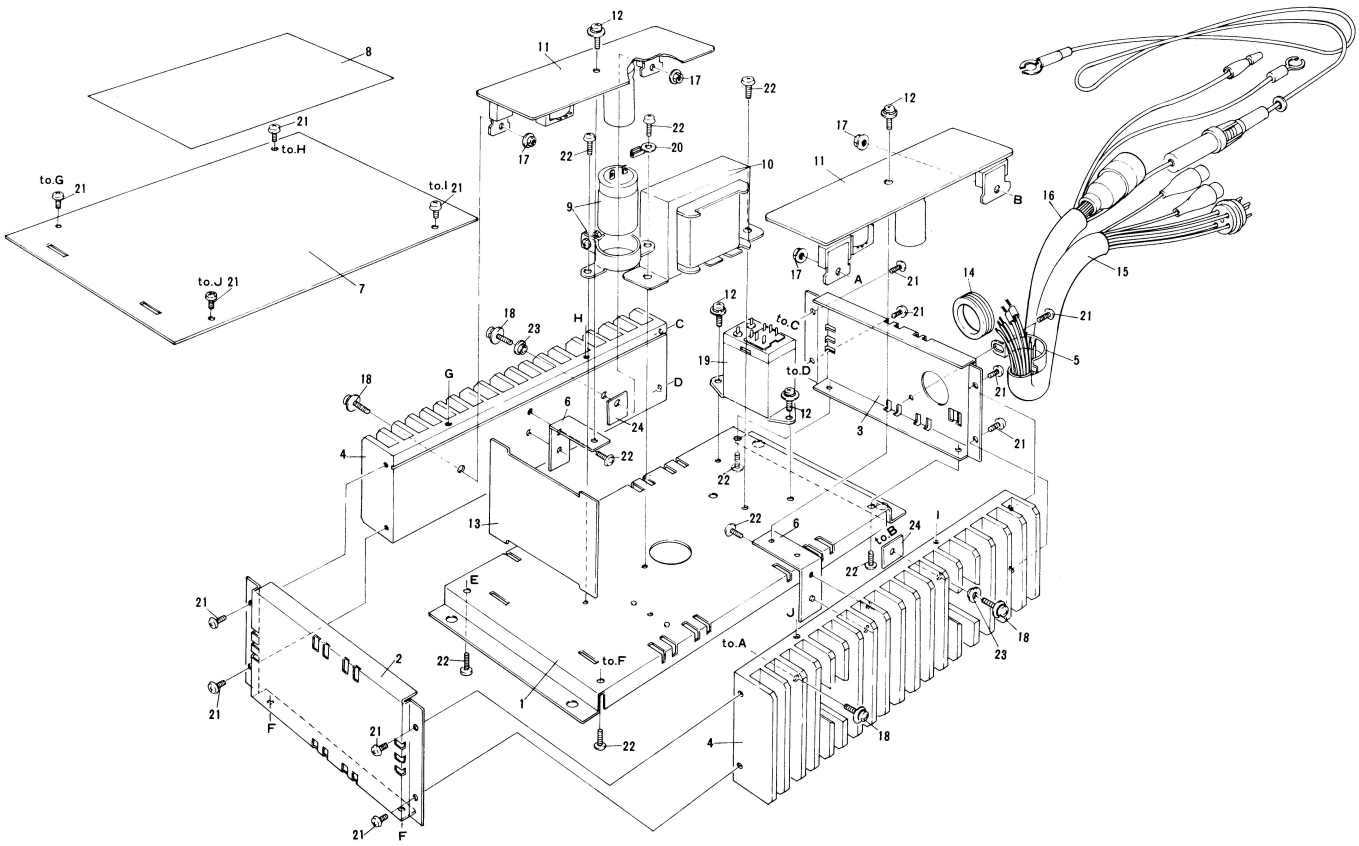

REF.NO.	PART NO. (ORDER NO.)	DESCRIPTION	Q'TY
1	312-0184-02	Chassis	1
2	305-0204-03	Side cover	1
3	305-0204-02	Side cover	1
4	313-1062-00	Heat sink	2
5	321-0782-01	Clamp	1
6	330-6767-00	Bracket	2
7	303-0270-01	Upper cover	1
8	285-0853-00	Guide label	1
9	042-0197-00	Electrolytic capacitor	1
10	009-0360-00	Choke	1
11	099-5466-00	P.W.B	1
12	735-3008-11	D-sems screw (M3x8)	4

REF.NO.	PART NO. (ORDER NO.)	DESCRIPTION	Q'TY
13	099-5467-00	P.W.B	1
14	345-2992-01	Rubber bush	1
15	852-6022-00	Extension lead	1
16	852-6023-00	Extension lead	1
17	722-0320-00	Nut	4
18	735-3016-19	D-sems screw (M3x16)	4
19	014-0462-00	Relay	1
20	073-0457-00	Terminal	1
21	714-3006-89	Machine screw (M3x6)	13
22	714-3006-81	Machine screw (M3x6)	9
23	078-0036-00	Insulator	2
24	078-0035-01	Insulator	2

■Acoustic Earphones:
HPA-019-101

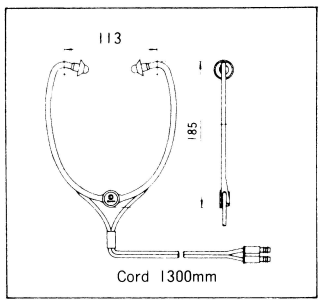

For RCA-194-100

■Stereo Headphones:
HPA-020-100

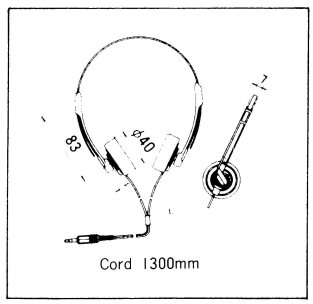

For RCA-195-100

■CIRCUIT DIAGRAM:

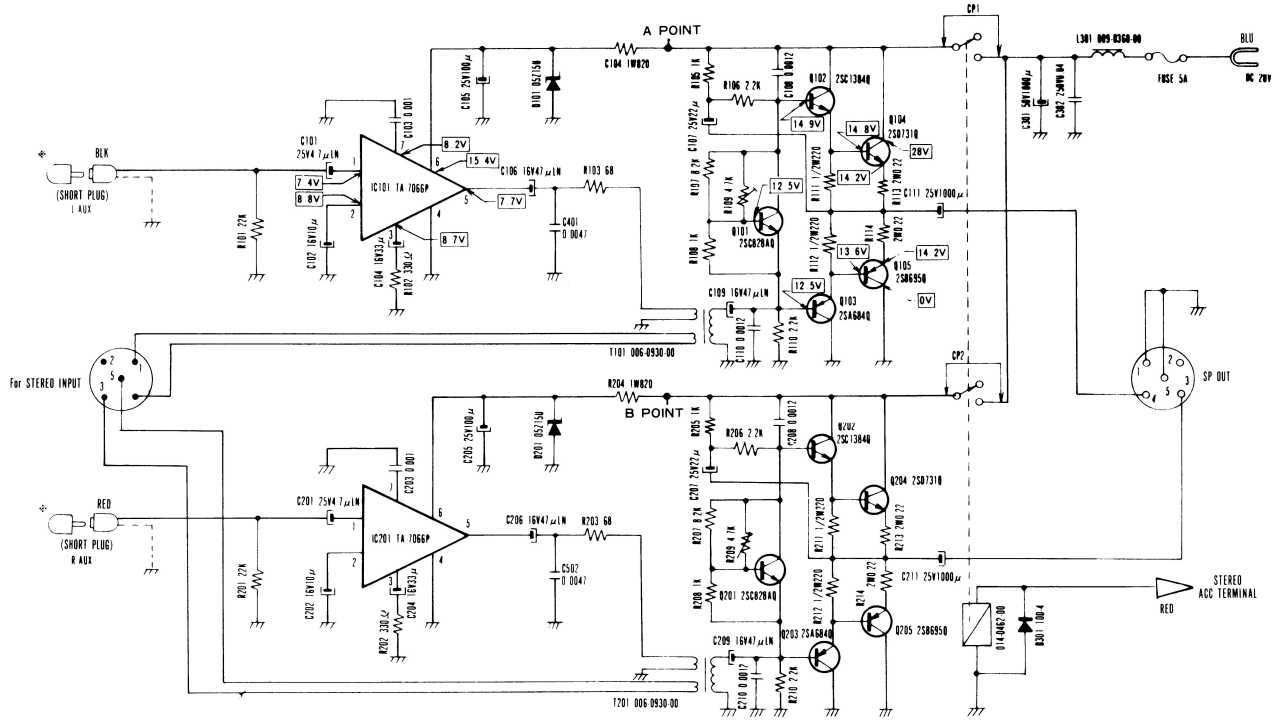

■PRINTED WIRING BOARD:

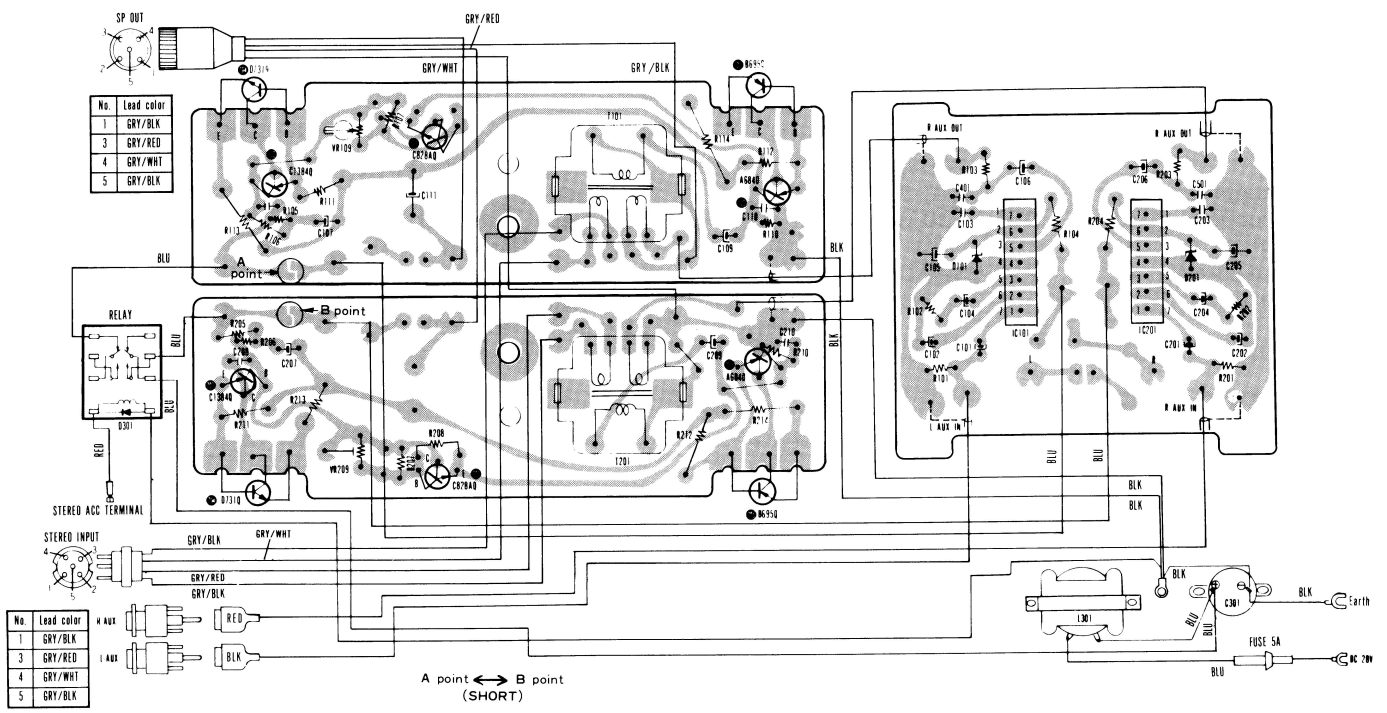

No.	Lead color
1	GRY/BLK
3	GRY/RED
4	GRY/WHT
5	GRY/BLK

■Bus Amplifier with Electronic Tuner:
AE-902A-01

■SPECIFICATIONS:

< FM Reception Section >

Receive Range;	87.9 to 107.9 MHz
Intermediate frequency;	10.7 MHz
Usable sensitivity;	Less than 15 dB
Image-rejection ratio;	More than 35 dB
Fidelity;	100 Hz to 7 kHz
Separation;	More than 20 dB
Auto tuning stop sensitivity;	DX 22 to 38 dB LO 48 to 68 dB

< AM Reception Section >

Receive Range;	531 to 1,602 MHz
Intermediate frequency;	450 kHz
Usable sensitivity;	Less than 35 dB
Image-rejection ratio;	More than 45 dB
Fidelity;	100 Hz to 4 kHz
Auto tuning stop sensitivity;	DX 25 to 41 dB LO 42 to 67 dB

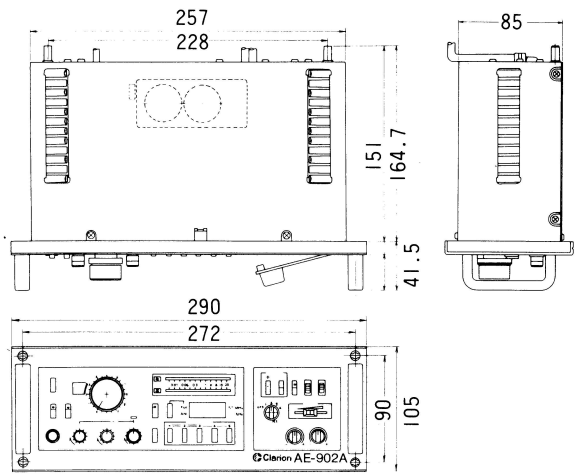

< Amplifier Section >

Microphone sensitivity (guide, passengers);	10 mV max.
AUX, VTR input sensitivity (L, R);	150 mV max.
Tape input sensitivity (L, R);	1000 mV max.
Fidelity (microphone);	100 Hz to 7 kHz
(AUX, VTR, tape);	100 Hz to 10 kHz
Tone control range (AUX, VTR, tape);	Approx. ±10 dB
S/N;	More than 40 dB
Rated power output;	9W x 4 (to 4 ohms)
Maximum power output;	More than 15W x 4
Distortion;	Less than 5%

< General >

Power supply voltage;	DC 21.6 to 31.2 V
Current consumption;	Approx. 5A (back-up: approx. 7 mA)
Usable temperature range;	-10°C to +50°C
Dimensions;	290 (W) x 105 (H) x 206 (D) mm
Weight;	Approx. 3 kg

■COMPONENTS:

Main unit		1
Parts bag	921-6240-00	1
{ Noise suppress	085-0010-31	2
{ Noise suppress	085-0030-08	1
Parts bag		1
{ Machine screw	716-0520-01	4
Booklet bag		1

Parts bag	922-1297-00	1
{ Extension lead (4P Power)	852-7894-00	1
Parts bag	922-1298-00	1
{ Extension lead (4P)	852-7893-00	1
Extension lead (6P)	852-7895-00	1
Extension lead (DIN 5P)	852-8080-03	1
Extension lead (DIN 6P)	852-8080-04	1
Extension lead (DIN 7P)	852-8080-05	1

■PARTS LIST:

◎Radio P.W.B

REF.NO.	PART NO. (ORDER NO.)	DESCRIPTION	Q'TY
$D_{35,36}$	001-0112-00	Diode (1S1588)	2
$D_{37\sim40}$	001-0263-00	Diode (S5277G)	4
$D_{18\sim25,27\sim28,30\sim33}^{5\sim6,10\sim16}$	001-0330-00	Diode (1SS119)	23
$D_{1,2,3}$	001-0401-47	Diode (HZS9.1JB2)	3
D_4	001-0401-49	Diode (HZS10JB1)	1
D_{101}	001-0401-59	Diode (HZS13JB2)	1
IFT_1	005-0844-01	IF-trans former	1
L_3	010-1180-00	Coil	1
L_2	010-1898-00	Coil	1

REF.NO.	PART NO. (ORDER NO.)	DESCRIPTION	Q'TY
L_4	010-1970-00	Coil	1
L_1	010-2003-03	Coil	1
VR_3	012-3808-05	Variable resistor (4.7kΩ)	1
VR_4	012-3808-06	Variable resistor (10kΩ)	1
$VR_{1,2}$	012-3808-08	Variable resistor (33kΩ)	2
PL_1	017-0321-01	Pilot lamp	1
C_{63}	042-0199-00	Electrolytic capacitor (10V22μF TAN) S	1
IC_8	051-0265-00	IC (μPA53C)	1
$IC_{9,11}$	051-0277-00	IC (TA78L005P)	2

REF. NO.	PART NO. (ORDER NO.)	DESCRIPTION	Q'TY
IC_5	051-0281-01	IC (μPB553AC)	1
IC_7	051-0329-00	IC (TD62506P)	1
IC_1	051-0363-00	IC (LA1140)	1
IC_{10}	051-0388-00	IC (μPC78L05H)	1
IC_4	051-0396-00	IC (TC9130P)	1
IC_6	051-0436-00	IC (μPD1701C014)	1
IC_3	051-0463-01	IC (ACZ1)	1
IC_2	051-0467-00	IC (HIC)	1
$X'tal_1$	061-1037-00	Crystal	1
Q_{32}	100-1175-49	Transistor (2SA1175)	1
$Q_{18,19}$	102-1545-02	Transistor (2SC1545B)	2
$Q_{24,25}$	102-2655-00	Transistor (2SC2655Y)	2
$Q_{2\sim17,23,26\sim29,34}$	102-2785-49	Transistor (2SC2785)	21
Q_{21}	103-1020-50	Transistor (2SD1020)	1
Q_{101}	103-1406-00	Transistor (2SD1406-O)	1
R_{101}	114-1001-61	Film resistor (2W10Ω)	1
C_{78}	160-1012-05	Ceramic capacitor (50V100pF)	1
C_{75}	160-2212-05	Ceramic capacitor (50V220pF)	1
$C_{10,52}$	160-4735-06	Ceramic capacitor (50V0.047μF)	2
C_{16}	160-6812-05	Ceramic capacitor (50V680pF)	1
C_{33}	160-8212-05	Ceramic capacitor (50V820pF)	1
$C_{3,6,7,8,13,15,19,53,60,76,77,82,88}$	171-1033-06	Ceramic capacitor (25V0.01μF)	13
$C_{2,50,51,56,58}$	171-2233-06	Ceramic capacitor (25V0.022μF)	5

REF. NO.	PART NO. (ORDER NO.)	DESCRIPTION	Q'TY
$C_{36,37}$	171-3333-06	Ceramic capacitor (25V0.033μF)	2
$C_{38,39}$	171-4723-06	Ceramic capacitor (25V0.0047μF)	2
$C_{29,30}$	171-6823-06	Ceramic capacitor (25V0.0068μF)	2
C_{24}	174-1000-13	Ceramic capacitor (50V10pF CH)	1
$C_{1,80,81}$	174-2200-13	Ceramic capacitor (50V22pF CH)	3
C_{34}	043-0147-00	Ceramic capacitor (50V220pF CH)	1
C_{89}	179-1073-52	Electrolytic capacitor (35V100μF)	1
C_{85}	179-1083-33	Electrolytic capacitor (16V1000μF)	1
C_{62}	179-2273-22	Electrolytic capacitor (10V220μF)	1
C_{83}	179-3373-32	Electrolytic capacitor (16V330μF)	1
C_{28}	042-0176-00	Electrolytic capacitor (16V10μF TAN)	1
$C_{14,26,27,44,45,48,49,54,59,69,70,71}$	182-1053-62	Electrolytic capacitor (50V1μF)	12
$C_{40,41,55}$	182-1056-62	Electrolytic capacitor (50V1μF NP)	3
$C_{5,61,67}$	182-1073-22	Electrolytic capacitor (10V100μF)	3
$C_{25,42,66,72,101}$	182-1073-32	Electrolytic capacitor (16V100μF)	5
C_{31}	182-2243-62	Electrolytic capacitor (50V0.22μF)	1
$C_{45,46,47,57}$	182-2253-62	Electrolytic capacitor (50V2.2μF)	4
C_{64}	182-3363-52	Electrolytic capacitor (35V33μF)	1
$C_{21,32,35}$	182-4743-62	Electrolytic capacitor (50V0.47μF)	3
C_9	182-4753-52	Electrolytic capacitor (35V4.7μF)	1
C_4	182-4763-22	Electrolytic capacitor (10V47μF)	1
$C_{65,84}$	182-4763-32	Electrolytic capacitor (16V47μF)	2
$C_{12,68,73,79,86,87}$	183-1063-32	Electrolytic capacitor (16V10μF)	6

◎Main P.W.B

REF. NO.	PART NO. (ORDER NO.)	DESCRIPTION	Q'TY
$D_{209,210,211\sim216}$	001-0263-00	Diode (S5279G)	8
$D_{203,204,207,208}$	001-0330-00	Diode (1SS119)	4
D_{206}	001-0423-31	Diode (MTZ18J)	1
$T_{201\sim204}$	006-0918-02	Input trans(10k/10kCT)	4
$VR_{201,202}$	012-3808-06	Variable resistor (10kΩ)	2
$RY_{1\sim5}$	014-0502-04	Relay (24V DS)	5
RY_7	014-0511-01	Relay (24V ST)	1
$C_{231,232,301}$	160-4735-06	Ceramic capacitor (0.04μF)	3
$IC_{201,207,209}$	051-0285-50	IC (TA75558S)	3
$IC_{210\sim213}$	051-0418-00	IC (AM7170)	4
IC_{208}	051-0524-00	IC (BASS/TREB)	1
$Q_{201,202,203}$	102-2240-00	Transistor (2SC2240GR)	3
Q_{210}	102-2655-00	Transistor (2SC2655O)	1
Q_{209}	102-2785-49	Transistor (2SC2785)	1
Q_{208}	103-1406-00	Transistor (2SD1406-O)	1
R_{300}	111-1021-82	Film resistor (½W1kW)	1
R_{273}	114-1021-11	Film resistor (1W1kΩ)	1
$R_{293,297,301,305}$	114-1011-11	Film resistor (1W100Ω)	4

REF. NO.	PART NO. (ORDER NO.)	DESCRIPTION	Q'TY
$R_{292,296,300,304}$	114-2291-11	Film resistor (1W2.2Ω)	4
$C_{207,208,209}$	160-2212-05	Ceramic capacitor (220pF)	3
$C_{254,256,264,266,275,277,286,288}$	172-1042-20	Polyester capacitor (63V0.1μF)	8
$C_{252,262,273,284}$	172-3332-20	Polyester capacitor (63V0.033μF)	4
$C_{249,259,270,281}$	173-1022-10	Polyester capacitor (0.001μF)	4
$C_{253,263,274,285}$	174-8090-13	Ceramic capacitor (8pF)	4
$C_{215,239,240,245}$	179-1073-42	Electrolytic capacitor (25V100μF)	4
$C_{248,258,269,280,291}$	179-1073-52	Electrolytic capacitor (35V100μF)	5
$C_{255,265,267,276,278,287}$	179-1083-52	Electrolytic capacitor (35V1000μF)	6
C_{289}	179-2273-42	Electrolytic capacitor (25V220μF)	1
$C_{250,260,271,282}$	182-1073-22	Electrolytic capacitor (10V100μF)	4
$C_{201,203,205,251,261,272,283}$	182-4763-42	Electrolytic capacitor (25V47μF)	7
$C_{202,204,206,210,211,212,213,216\sim218,233,234,237,238,241\sim244,246,247}$	183-1053-62	Electrolytic capacitor (50V1μF)	20
$C_{235,257,268,279}$	183-1063-32	Electrolytic capacitor (16V10μF)	4
C_{290}	183-1063-52	Electrolytic capacitor (35V10μF)	1
$C_{214,236}$	183-2263-32	Electrolytic capacitor (16V22μF)	2

◎Others

REF.NO.	PART NO. (ORDER NO.)	DESCRIPTION	Q'TY
$C_{301,302}$	160-4735-06	Ceramic capacitor (0.047μF)	2
IC_{206}	051-0580-00	IC (LR34611)	1
IC_{214}	051-0248-00	IC (TA78L012)	1
$IC_{215,216}$	051-0412-00	IC (BA681)	2
Q_{205}	102-2655-25	Transistor (2SC2655Y)	1
$R_{320,321}$	114-1821-11	Film resistor (1W1.8kΩ)	2
C_{292}	172-2242-20	Polyester capacitor (63V0.22μF)	1

REF.NO.	PART NO. (ORDER NO.)	DESCRIPTION	Q'TY
C_{228}	173-1042-10	Polyester capacitor (0.1μF)	1
$C_{294,298}$	183-1053-62	Electrolytic capacitor (50V1μF)	2
$C_{293,295,296,299}$	183-1063-32	Electrolytic capacitor (16V10μF)	4
C_{297}	183-1063-52	Electrolytic capacitor (35V10μF)	1
$C_{229,297}$	183-3353-62	Electrolytic capacitor (50V3.3μF)	2
C_{305}	183-2263-52	Electrolytic capacitor (35V22μF)	1

■PARTS LIST: (AE-902A-01)

◎Main section

REF.NO.	PART NO. (ORDER NO.)	DESCRIPTION	Q'TY
1	345-3878-00	Button rubber	8
2	345-3886-01	Spacer	1
3	347-1379-00	Shade	1
4	347-1380-00	Cushion	1
6	353-0222-00	Shade	1
7	371-3135-02	Trim plate	1
8	382-0637-00	Button	2
9	382-0637-01	Button	9
10	335-1762-00	Escutcheon	1
11	370-3659-03	Escutcheon	1
12	371-3134-01	Trim plate	1
13	374-0852-00	Back plate	1
14	099-7014-01	P.W.B	1
15	012-4162-00	Variable resistor (Mic, Melody)	2
16	012-4163-00	Variable resistor (Bass, Tre)	2
19	051-0418-00	IC (AN7170)	4
20	074-0713-00	Outlet socket (DIN 5P)	1
21	074-0713-01	Outlet socket (DIN 6P)	2
22	074-0713-02	Outlet socket (DIN 7P)	1
23	074-0713-03	Outlet socket (8P)	1
24	330-7919-00	IC bracket	2
25	944-0678-00	Filter ass'y	1
26	099-7010-00	P.W.B	1
27	313-1191-00	Heat sink	1
28	001-0312-02	L.E.D	5
29	013-3426-01	Switch	2
30	013-3708-01	Switch	9
31	013-3708-02	Switch	2
32	099-7011-01	P.W.B	1
33	335-1776-00	Diode bracket	1
34	379-0039-02	Indicator	1
35	379-0063-00	Indicator	2
37	012-4166-00	Variable resistor (Main VR)	1
38	013-3521-02	Switch	1
39	013-3721-00	Switch	1
40	013-3722-00	Switch	2
41	099-7015-01	P.W.B	1
42	075-0177-04	Jack	1
43	309-0521-01	Front plate	1

REF.NO.	PART NO. (ORDER NO.)	DESCRIPTION	Q'TY
44	330-7918-00	P.W.B bracket	1
45	345-3818-00	P.L cap	5
46	382-0638-00	Button	2
47	382-0638-01	Button	1
49	714-3006-80	Machine screw (M3x6)	10
50	722-0370-00	Nut	2
51	731-3005-80	Tap tight (M3x5)	19
52	731-3006-80	Tap tight (M3x6)	15
53	285-1141-01	Guide label	1
54	286-3678-00	Set plate	1
55	304-0370-02	Lower cover	1
56	305-0220-00	Side cover	2
57	307-0380-01	Rear cover	1
58	310-1180-01	Upper case	1
59	313-1190-00	Heat sink	2
60	321-0909-01	Clamp	1
61	330-7917-00	Partition board	1
62	330-7920-00	Bracket	1
63	330-7937-00	Bracket	2
64	330-7944-02	Shield plate	1
65	341-1323-00	Spacer	2
67	380-4423-01	Knob	1
68	380-4424-00	Knob	1
69	380-4425-00	Knob	4
70	380-4426-00	Knob	3
72	383-0386-00	Lid	1
73	383-0387-00	Handle	2
74	700-3006-80	Tap screw (M3x6)	4
75	714-2608-81	Machine screw (M2.6x8)	12
76	714-2614-81	Machine screw (M2.6x14)	8
77	714-4010-11	Machine screw (M4x10)	2
78	714-5008-80	Machine screw (M5x8)	4
79	722-0368-00	Nut	5
80	731-3008-80	Tap tight (M3x8)	1
81	852-7916-00	Extension lead	1
82	852-7917-00	Extension lead	1
83	092-0542-02	ANT. receptacle	1
84	347-1597-00	Label	1

■EXPLODED VIEW: (AE-902A-01)

◎Main section

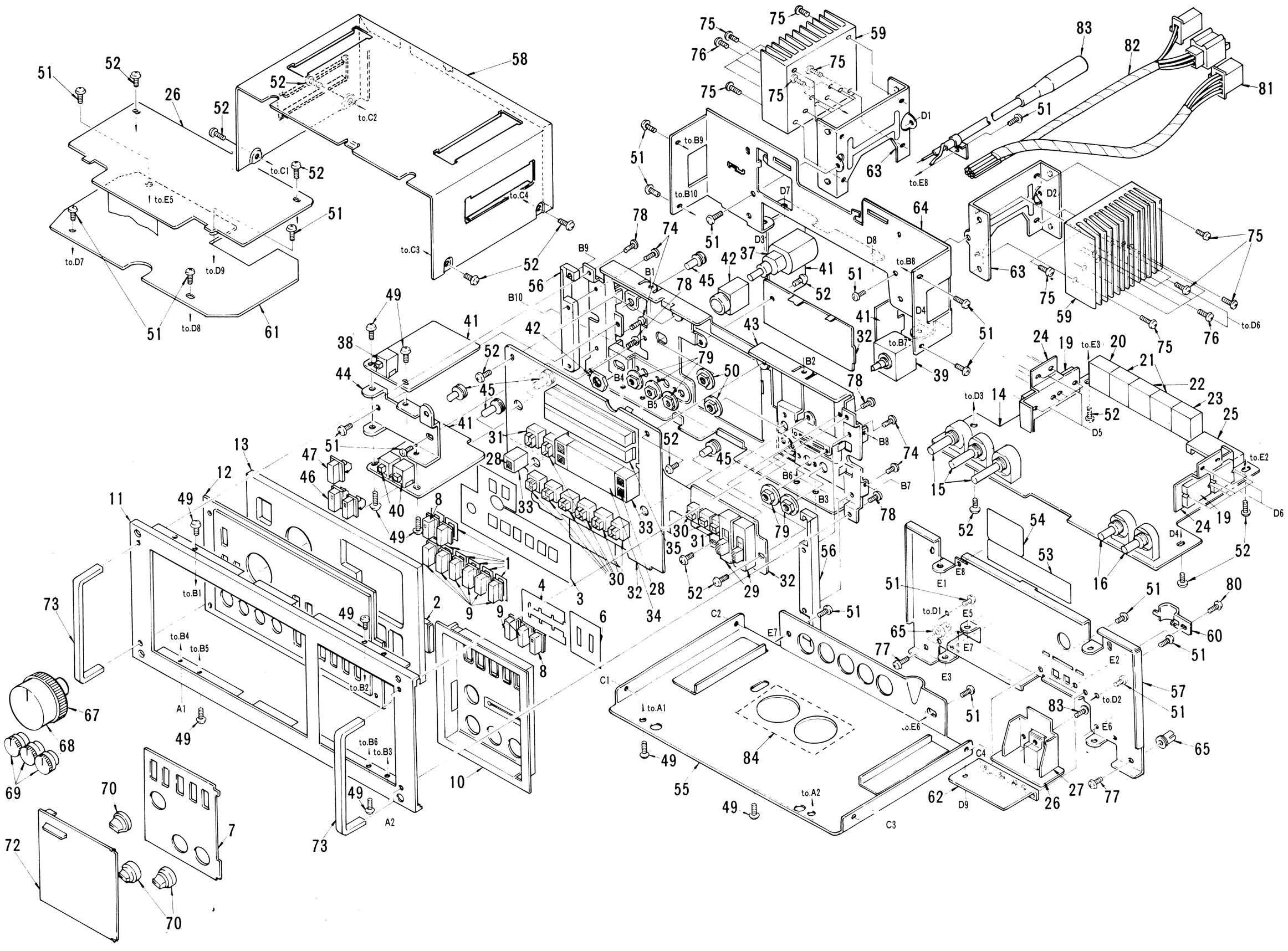

■CIRCUIT DIAGRAM: (AE-902A-01)

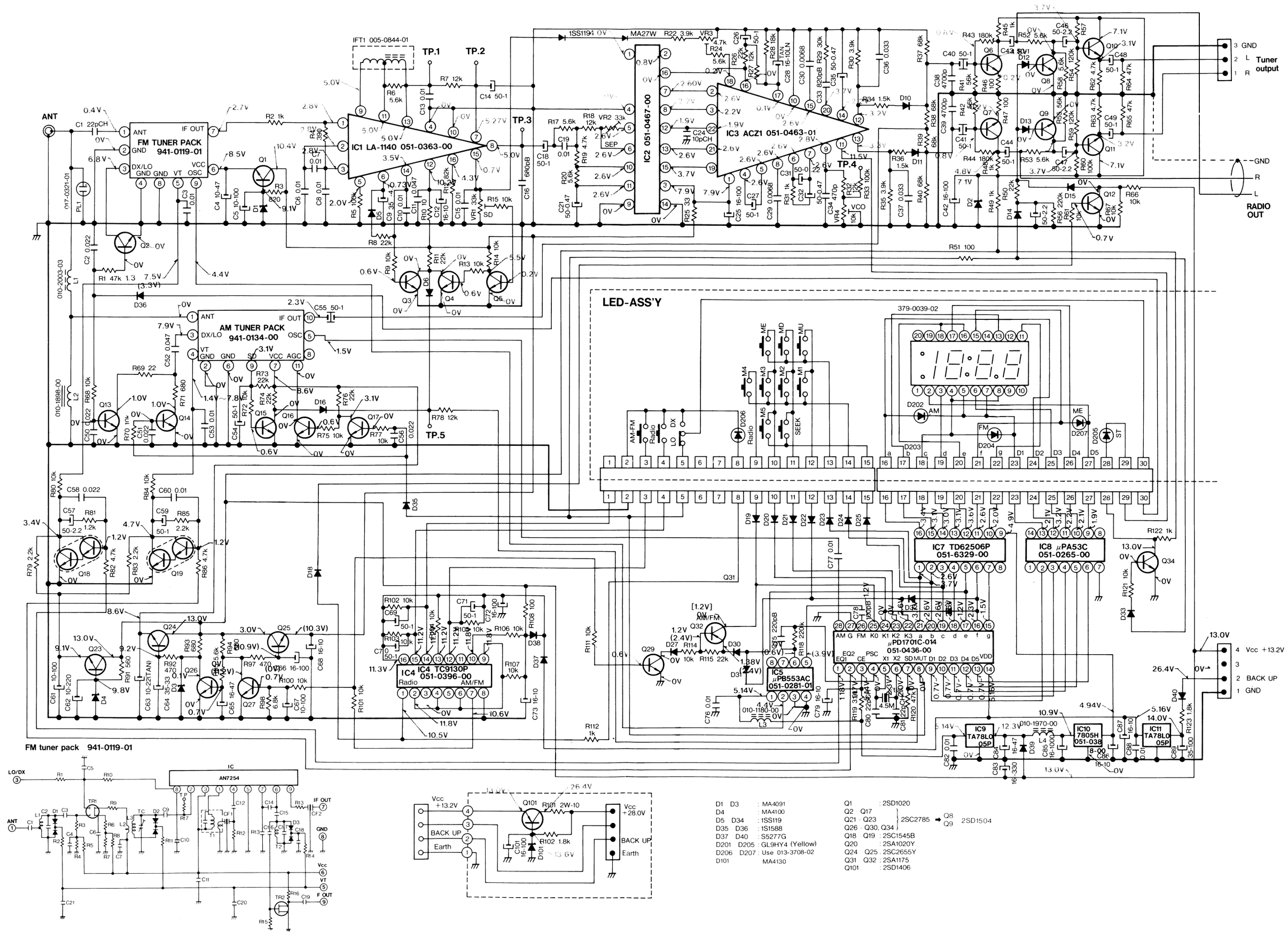

D1 D3 : MA4091
D4 : MA4100
D5 D34 : 1SS119
D35 D36 : 1S1588
D37 D40 : S5277G
D201 D205 : GL9HY4 (Yellow)
D206 D207 : Use 013-3708-02
D101 MA4130

Q1 : 2SD1020
Q2 Q17
Q21 - Q23 } 2SC2785 ➡ Q8
Q26 - Q30, Q34 } 2SC2785 ➡ Q9
Q18 Q19 : 2SC1545B
Q20 : 2SA1020Y
Q24 Q25 : 2SC2655Y
Q31 Q32 : 2SA1175
Q101 : 2SD1406

2SD1504

■PRINTED WIRING BOARD: (AE-902A-01)

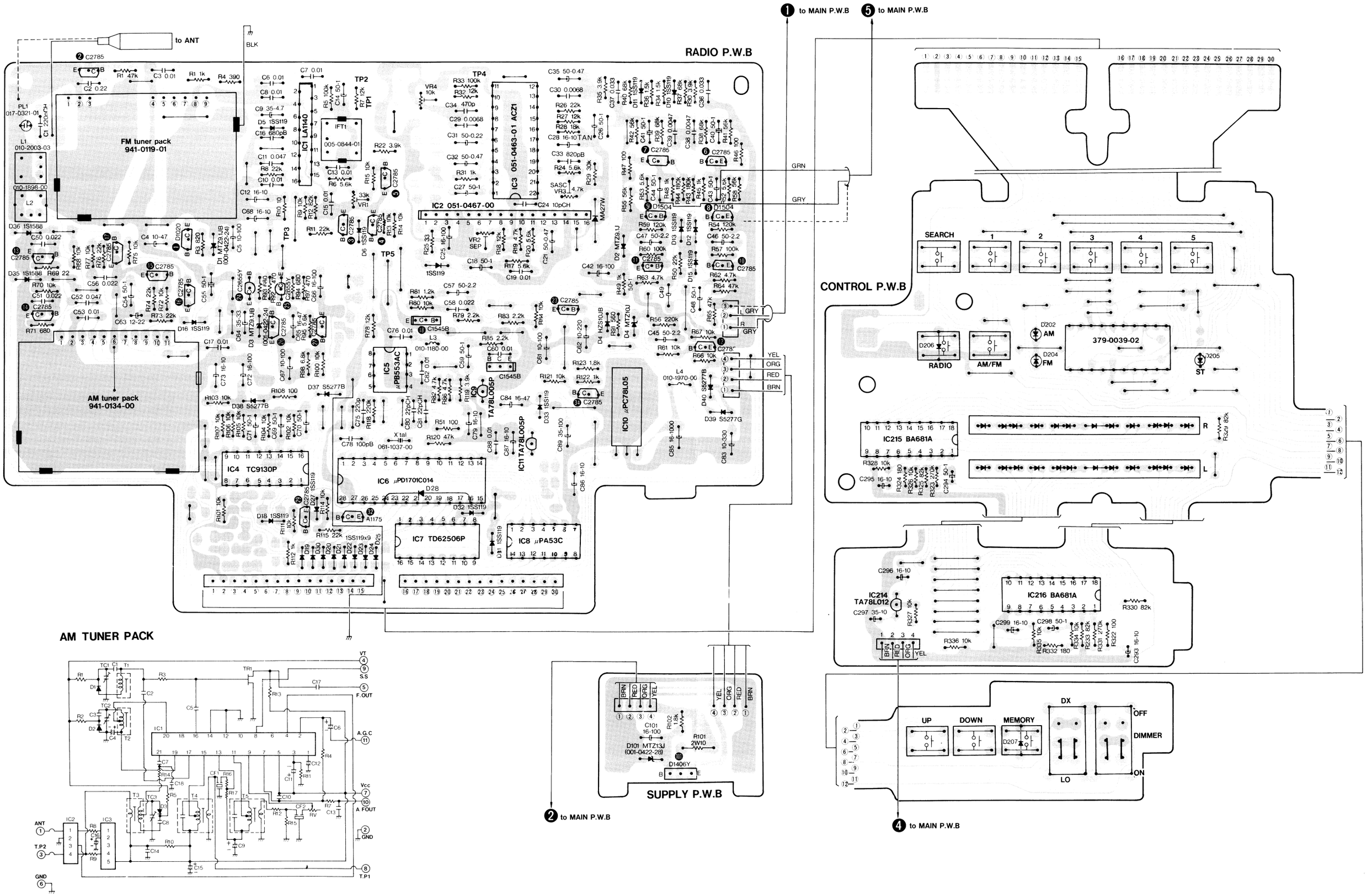

■CIRCUIT DIAGRAM: (AE-902A-01)

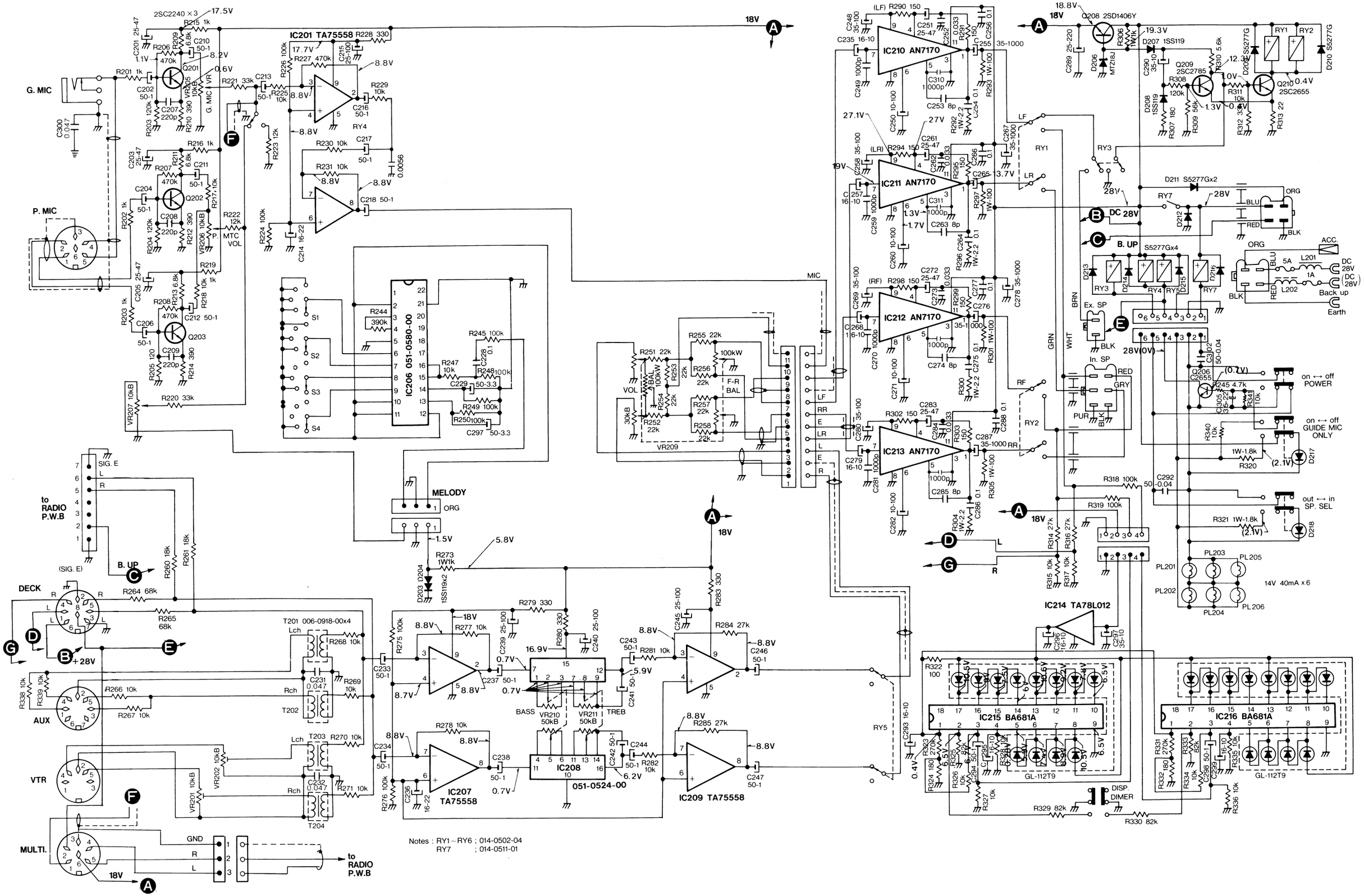

■PRINTED WIRING BOARD:

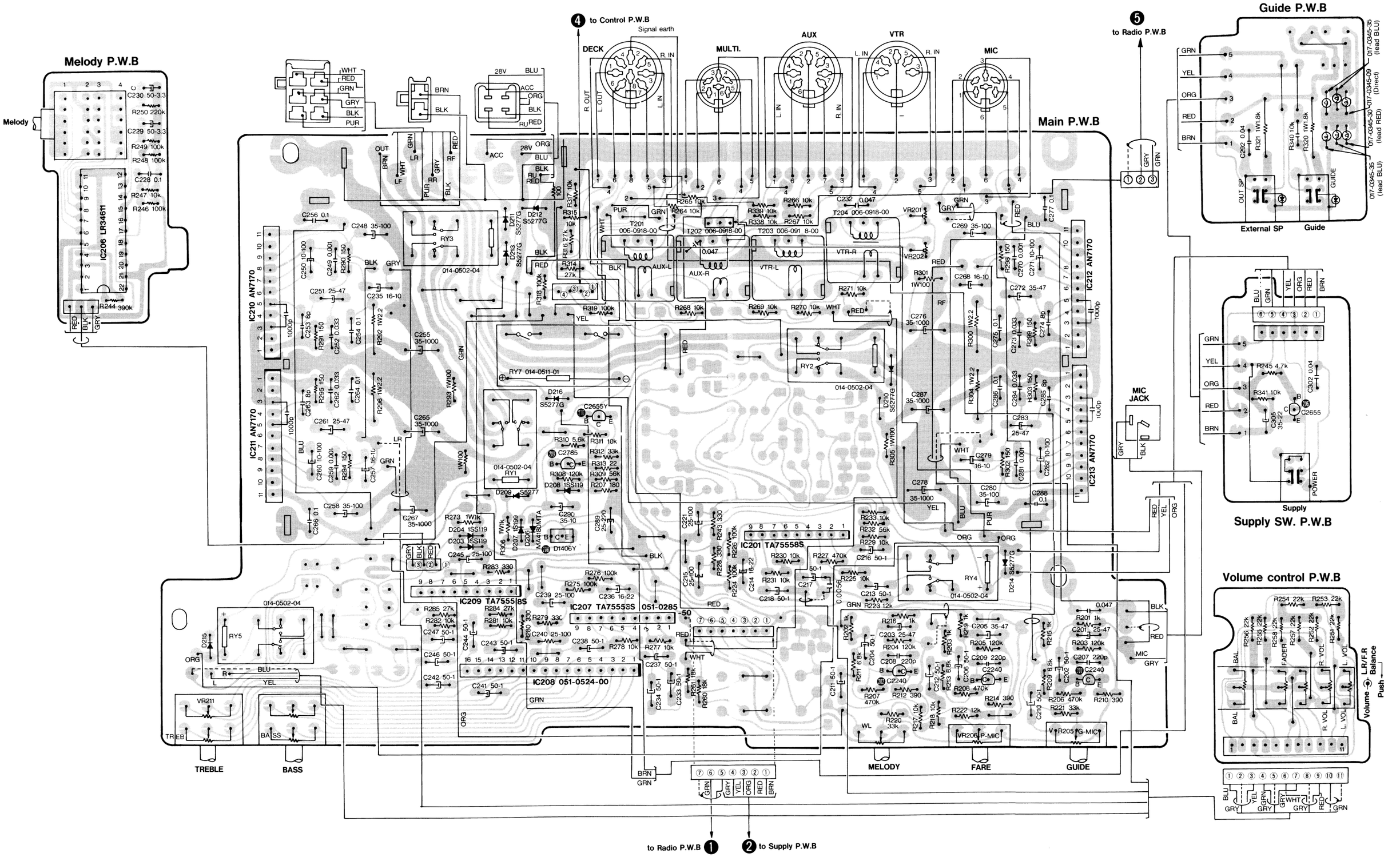

AE-902A

■Dual Cassette Deck:
CW-840E-01

■SPECIFICATIONS:

Reproduction system:	4 track, 2 channel stereo playback
Tape speed:	4.76cm/s
Wow & flutter:	Less than 0.3% (W.R.M.S)
S/N ratio:	More than 40dB
Output level:	0.775V (Play 0VU)
Power supply voltage:	DC 21.6V to 31.2V Negative ground
Dimensions:	Width 290mm Height 105mm Depth 201.5mm
Weight:	3.7kg

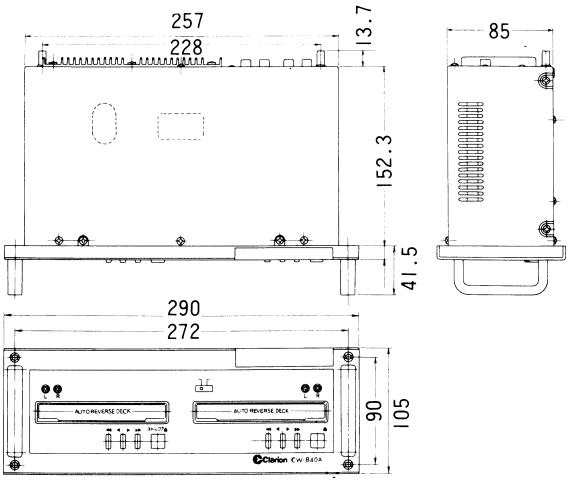

■COMPONENTS:

Main unit		1
Extension lead (RCA-1.2m)	852-4828-00	2
Extension lead (POWER)	852-8039-00	1
Extension lead (8P DIN)	852-8102-01	1
Booklet bag		1
Parts bag	921-7711-01	1
{ Special screw	716-0520-01	4

■FEATURES:

- Feather-touch control buttons.
- Equipped with double output system including mixing output for connection to a bus amplifier and independent Multi output.
- Equipped with remote control jacks for simultaneous start and stop of two decks when connected to Multi controller.

■PARTS LIST:

◎Electrical section

◎MAIN P.W.B

REF.NO.	PART NO. (ORDER NO.)	DESCRIPTION	Q'TY
$D_{1\sim5}$	001-0112-00	Diode (1S1588)	5
$D_{6\sim10}$	001-0379-00	Diode (S5566G)	5
$T_{1\sim4}$	006-0918-00	Input trans(10k-10k)	4
$IC_{1\sim3}$	051-0379-00	IC (PC617)	3
$IC_{1\sim4}$	051-0414-00	IC (M5218L)	4
$IC_{5\sim11}$	051-0482-00	IC (TC4053BP)	7

REF.NO.	PART NO. (ORDER NO.)	DESCRIPTION	Q'TY
$C_{2.12.22.32}$	172-3341-20	Polyester capacitor (0.33μF) SS	4
$C_{1.11.21.31}$	173-1821-10	Polyester capacitor (1800pF) S	4
$C_{5.15.25.35}$	173-4721-10	Polyester capacitor (4700pF) S	4
$C_{4.14.24.34.41.42}$	179-1073-32	Electrolytic capacitor (16V100μF) S	6
$C_{3.13.23.33}$	179-2273-21	Electrolytic capacitor (10V220μF) S	4
$C_{6.16.26.36}$	182-1066-22	Electrolytic capacitor (10V10μF NP) SS	4

◎SOCKET P.W.B

REF.NO.	PART NO. (ORDER NO.)	DESCRIPTION	Q'TY
$D_{106\sim109}$	001-0112-00	Diode (1S1588V)	4
D_{103}	001-0311-00	Diode (GL-9PR10)	1
$D_{101.104}$	001-0398-00	Diode (S5277N)	2
$D_{110.111}$	001-0425-23	Diode (HZS8.2J)	2
D_{102}	001-0455-00	Diode (ERB84-009)	1
T_{101}	007-1099-00	Output trans(DC-DC)	1
CH_{101}	009-0625-00	Choke (1MH)	1
L_{102}	010-1686-00	Coil (18MH)	1
L_{104}	010-1839-00	Coil (150μH)	1
L_{101}	010-2118-00	Coil (600μH)	1
RY_{101}	014-0502-04	Relay	1
C_{101}	042-0355-00	Electrolytic capacitor (35V470μF)	1

REF.NO.	PART NO. (ORDER NO.)	DESCRIPTION	Q'TY
IC_{101}	051-0514-00	IC (μPC311C)	1
Q_{102}	100-1020-00	Transistor (2SA1020)	1
Q_{103}	102-2655-00	Transistor (2SC2655)	1
Q_{101}	103-1270-49	Transistor (2SD1270-RQ)	1
R_{115}	114-1511-31	Film resistor (3W150Ω) OM	1
C_{102}	160-1012-05	Ceramic capacitor (100pF) HD	1
C_{115}	172-1042-20	Polyester capacitor (0.1μF) SS	1
C_{103}	173-2222-10	Polyester capacitor (2200pF) S	1
C_{111}	173-5622-10	Polyester capacitor (5600pF) S	1
$C_{112.113}$	182-1063-32	Electrolytic capacitor (16V10μF) SS	2
C_{110}	182-1073-32	Electrolytic capacitor (16V100μF) SS	1
$C_{104.105}$	182-2263-42	Electrolytic capacitor (25V22μF) SS	2

■PARTS LIST: (CW-840E-01)

◎Main section

REF.NO.	PART NO. (ORDER NO.)	DESCRIPTION	Q'TY
1	099-7656-00	P.W.B	1
2	340-1374-00	Spacer	1
3	347-2044-00	Insulator	1
4	099-7658-00	P.W.B	1
5	313-1189-01	Heat sink	1
6	716-0702-00	Spacer	4
7	704-3012-80	Tap screw (M3x12)	1
8	722-0320-00	Nut	4
9	074-0713-02	Outlet socket (7P-DIN)	2
10	074-0713-03	Outlet socket (8P-DIN)	1
11	075-0221-01	Jack (4P RCA)	1
12	099-7056-00	P.W.B	1
13	330-7915-00	Bracket	1
14	335-0725-00	Lead holder	1
15	341-1323-00	Spacer	2
16	714-3008-80	Machine screw (M3x8)	2
17	714-4010-10	Machine screw (M4x10)	2
18	723-3000-20	Hex-nut (M3)	2
19	731-3008-80	Tap tight (M3x8)	8
20	307-0379-01	Rear cover	1
21	285-1136-01	Guide label	1
22	286-3678-00	Set plate	1
23	290-2567-04	Label	1
24	310-1177-00	Upper case	1
25	311-1145-01	Lower case	1
26	321-0828-01	Clamp	1
27	330-7913-01	Mechanism	2
28	330-7946-00	Inner rid	1
29	347-1447-00	Insulator	1
30	382-0636-01	Button (EJECT)	2
31	731-3005-80	Tap tight (M3x5)	8
32	731-3006-80	Tap tight (M3x6)	25

REF.NO.	PART NO. (ORDER NO.)	DESCRIPTION	Q'TY
33	735-3006-11	D-sems screw (M3x6)	5
34	852-8039-00	Extension lead	1
35	930-0516-00	Tape mechanism	2
36	285-1097-03	Guide label	1
37	731-3008-80	Tap tight (M3x8)	3
38	335-1760-00	Frame	2
39	341-1319-00	Cover shaft	2
40	750-2319-00	Spring	2
41	320-0347-00	Dust proof cover	2
42	012-3808-06	Variable resistor	4
43	013-3801-00	Slide switch	1
44	001-0392-02	Diode (Yellow)	8
45	001-0394-02	Diode (Yellow)	2
46	013-3640-01	Switch	6
47	099-7657-00	P.W.B	1
48	340-1315-00	Spacer	8
49	340-1315-02	Spacer	2
50	309-0520-00	Front plate	1
51	345-3817-00	Stopper	4
52	735-3006-11	D-sems screw (M3x6)	3
53	383-0387-00	Handle	2
54	382-0637-01	Button	6
55	305-0220-00	Side cover	2
56	353-0224-02	Shade	6
57	370-3659-04	Escutcheon	1
58	371-3133-02	Trim plate	1
59	735-3008-11	D-sems screw (M3x8)	4
60	731-3006-80	Tap tight (M3x6)	4
61	714-5008-80	Machine screw (M5x8)	4
62	700-3006-80	Tap screw (M3x6)	4
63	353-0261-00	Shade	1

■EXPLODED VIEW: (CW-840E-01)

◎Main section

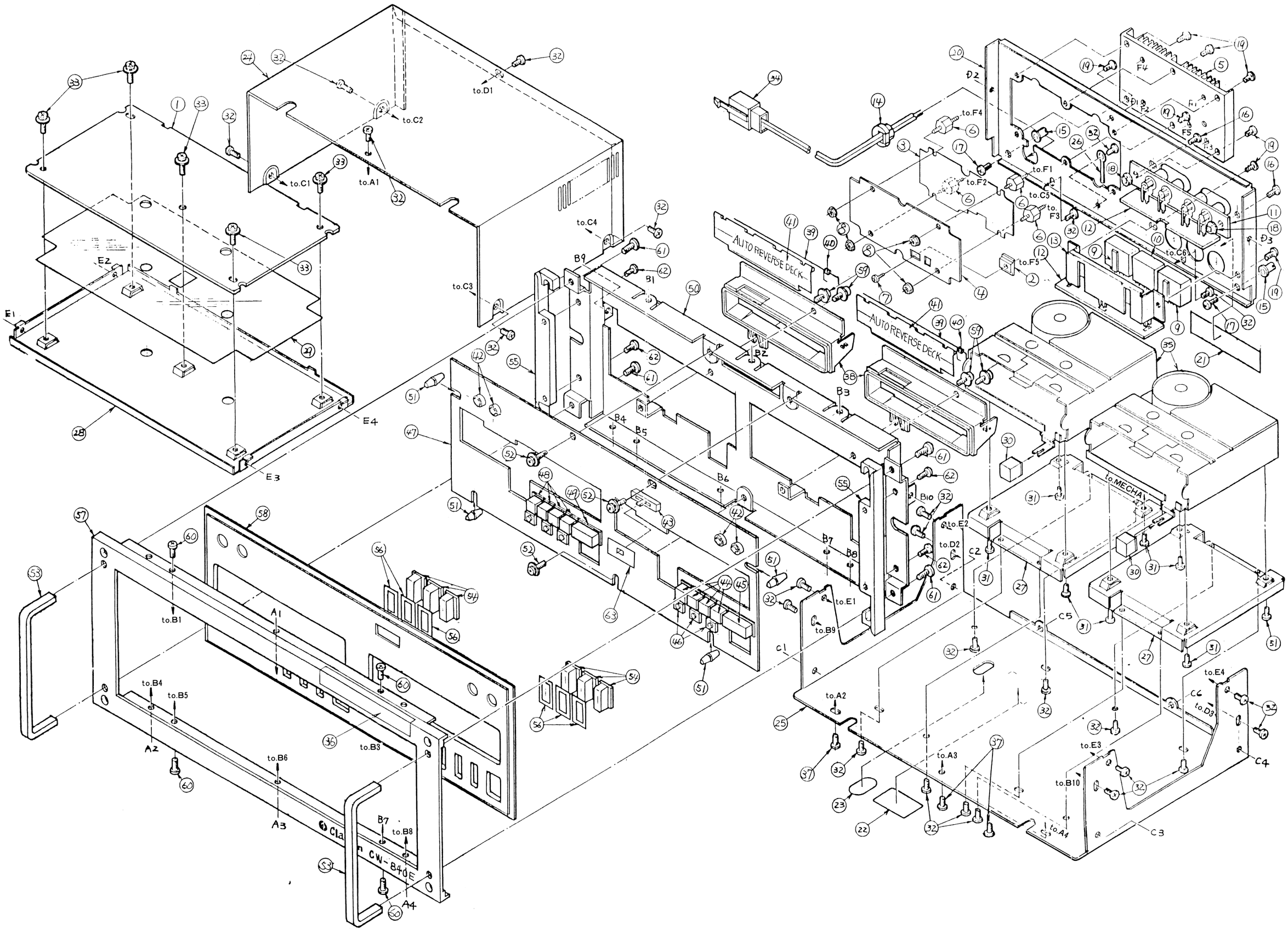

■CIRCUIT DIAGRAM: (CW-840E-01)

MAIN P.W.B

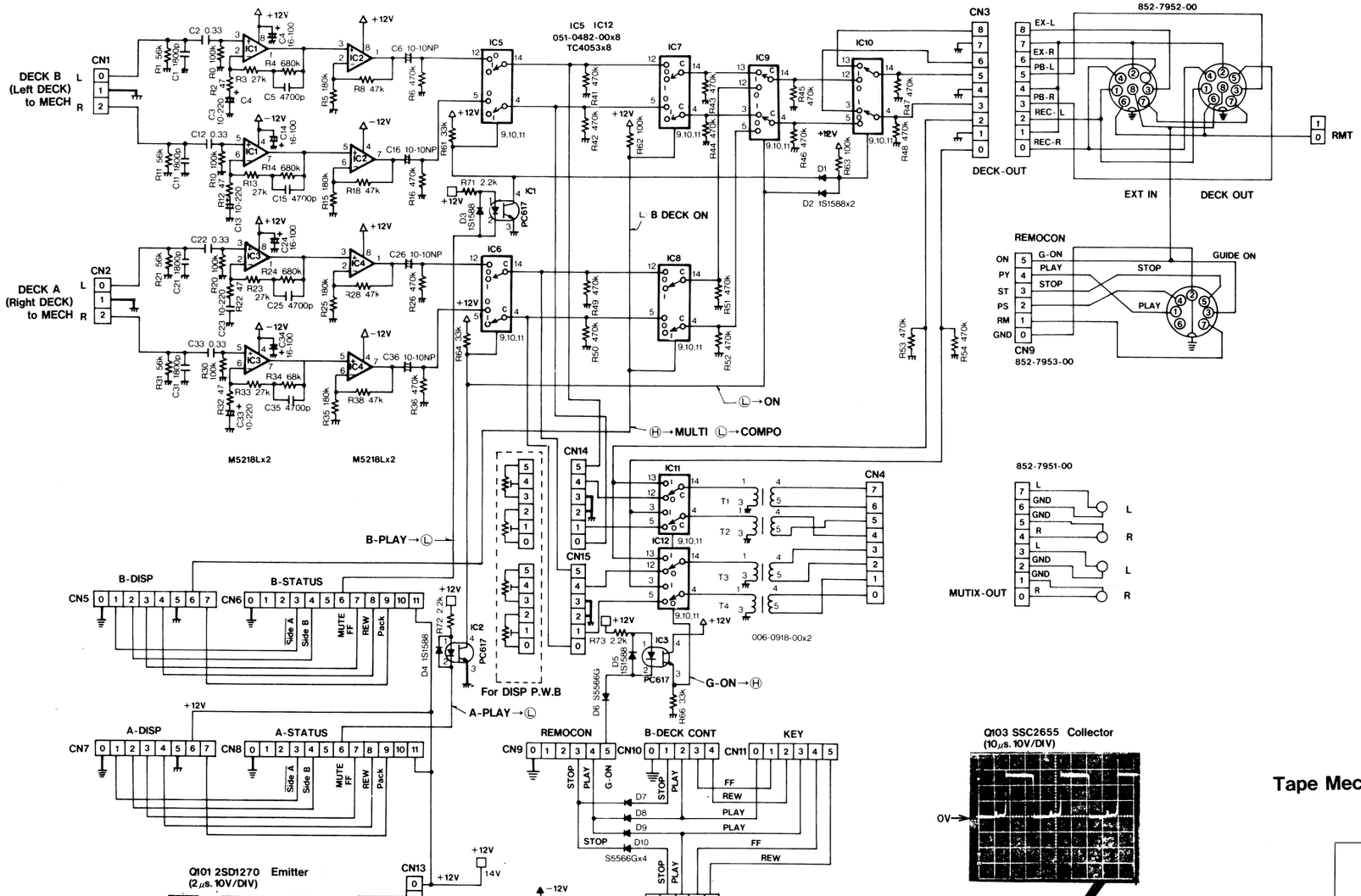

DISPLAY P.W.B

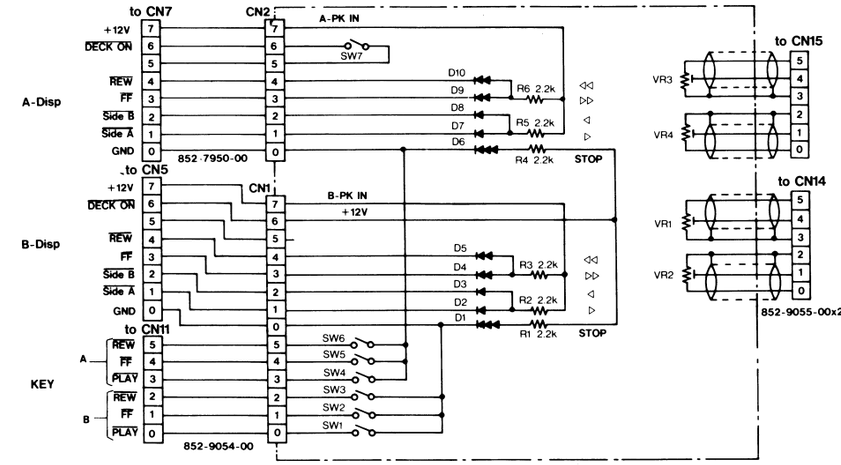

Tape Mechanism

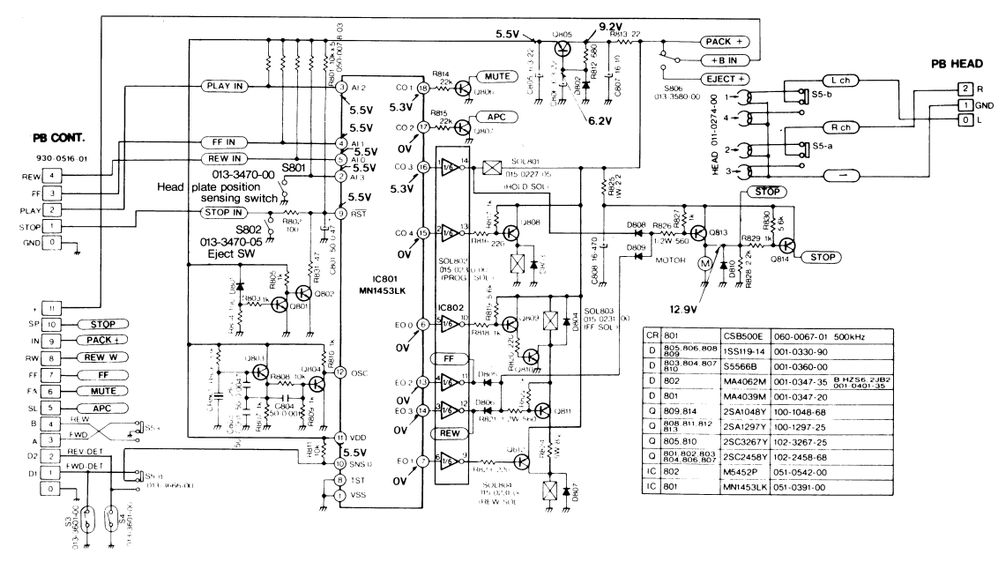

CR	801	CSB500E	060-0067-01	500kHz
D	805,806,808,809	1SS119-14	001-0330-90	
D	803,804,807,810	S5566B	001-0360-00	
D	802	MA4062M	001-0347-35	B HZ5.6, 2JB2 001-0401-35
D	801	MA4039M	001-0347-20	
Q	809,814	2SA1048Y	100-1048-68	
Q	808,811,812,813	2SA1297Y	100-1297-25	
Q	805,810	2SC3267Y	102-3267-25	
Q	801,802,803,804,806,807	2SC2458Y	102-2458-68	
IC	802	M5452P	051-0542-00	
IC	801	MN1453LK	051-0391-00	

POWER P.W.B

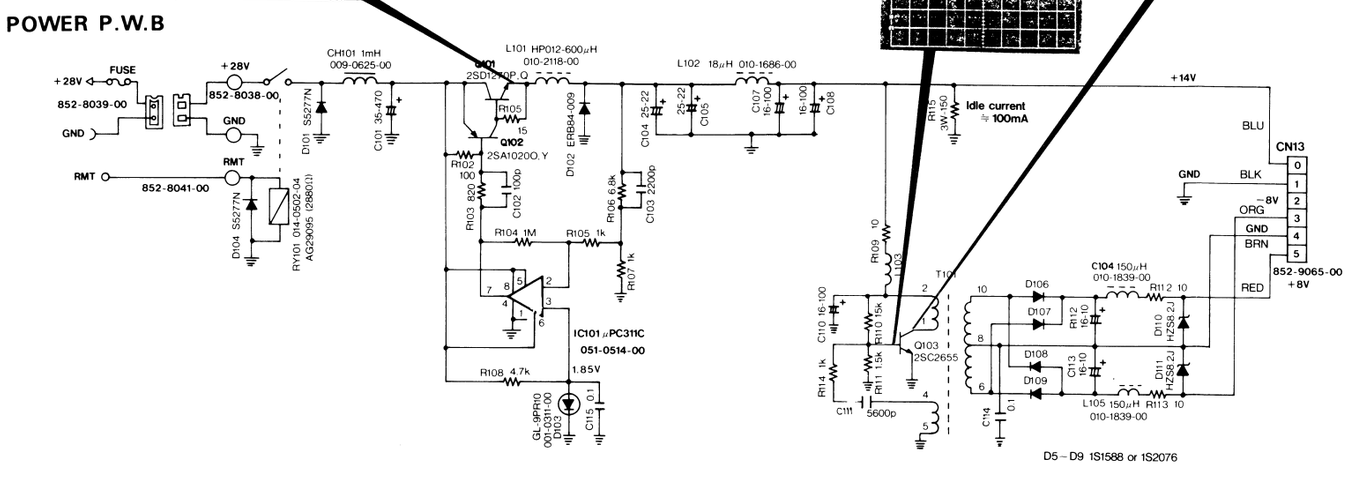

■PRINTED WIRING BOARD: (CW-840E-01)

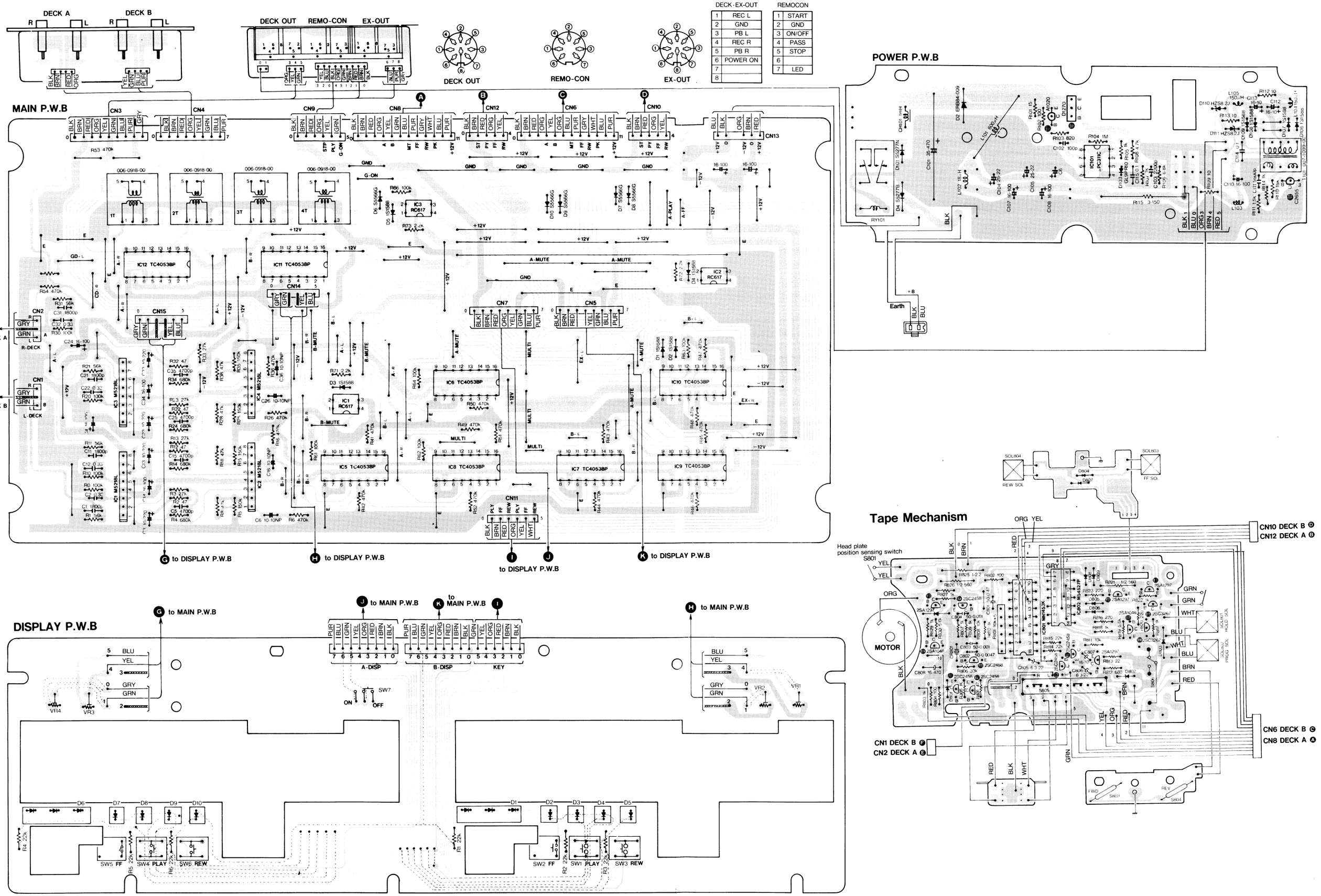

CW-840E-01

■EXPLODED VIEW • PARTS LIST: (CW-840E-01)

◎ Tape mechanism section

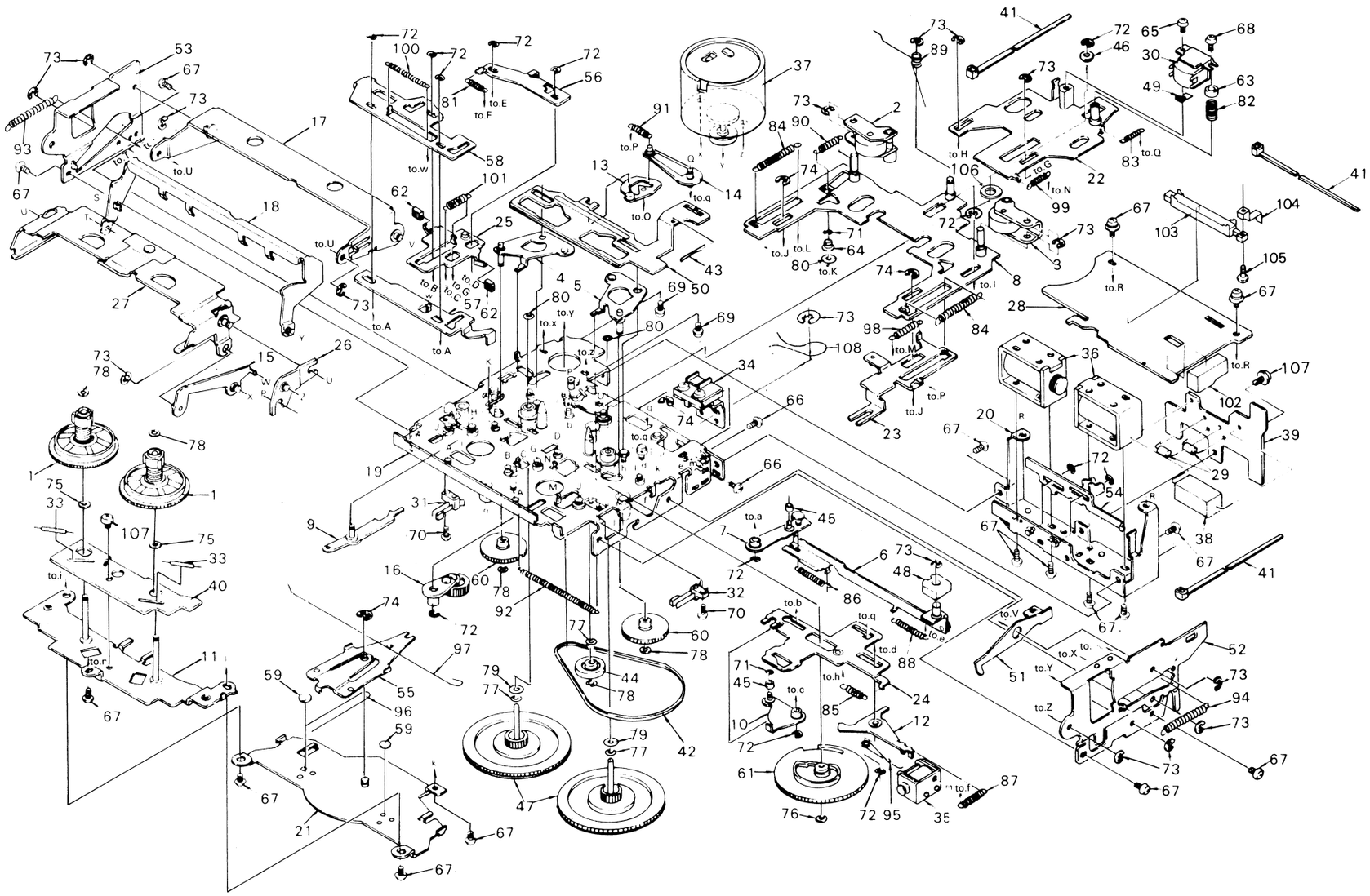

REF.NO.	PART NO. (ORDER NO.)	DESCRIPTION	Q'TY
1	960-3259-02	Reel base ass'y	2
2	960-3260-03	Roller F ass'y	1
3	960-3261-03	Roller R ass'y	1
4	960-3268-03	Idler P-F ass'y	1
5	960-3269-03	Idler P-R ass'y	1
6	960-3270-09	Plunger P ass'y	1
7	960-3271-05	Lock arm ass'y	1
8	960-3272-04	Head plate ass'y	1
9	960-3273-05	Head link ass'y	1
10	960-3274-05	Power link ass'y	1
11	960-3275-08	Base plate ass'y	1
12	960-3276-02	Plunger L	1
13	960-3277-02	Cam ass'y	1
14	960-3278-02	Cam plate ass'y	1
15	960-3280-03	Guide A-B ass'y	1
16	960-3283-04	FF gear ass'y	1

REF.NO.	PART NO. (ORDER NO.)	DESCRIPTION	Q'TY
17	960-3290-05	Guide A-A ass'y	1
18	960-3291-06	Swing L ass'y	1
19	960-3303-23	Deck plate ass'y	1
20	960-3304-01	FF plunger P ass'y	1
21	960-3305-00	Bottom plate ass'y	1
22	960-3306-02	Head plate B ass'y	1
23	960-3307-00	Eject lever ass'y	1
24	960-3308-00	Power plate ass'y	1
25	960-3309-01	Brake plate ass'y	1
26	960-3310-00	Eject link ass'y	1
27	960-3311-01	Pack guide ass'y	1
28	099-6945-00	P.W.B	1
29	001-0360-00	Diode (S5566B)	2
30	011-0274-10	Head	1
31	013-3470-00	Switch (HEAD)	1
32	013-3470-05	Switch (EJECT)	1

REF.NO.	PART NO. (ORDER NO.)	DESCRIPTION	Q'TY
33	013-3601-00	Switch (LEAD)	2
34	015-0227-05	Plunger	1
35	015-0230-00	Plunger	1
36	015-0231-01	Plunger	2
37	960-3520-00	DC motor ass'y	1
38	032-0071-00	Film resistor (5W8.2Ω)	1
39	099-6944-00	P.W.B	1
40	099-6206-01	P.W.B	1
41	335-0833-01	Clamp	4
42	602-0065-01	Belt	1
43	750-2108-03	Spring	1
44	604-0024-00	Tension pulley	1
45	610-0092-00	Roller E	2
46	610-0098-01	Head P roller	1
47	611-0061-01	Flywheel	2
48	630-1198-03	Core	1

REF.NO.	PART NO. (ORDER NO.)	DESCRIPTION	Q'TY
49	630-1279-00	Spacer	1
50	960-3355-00	Change plate ass'y	1
51	630-1326-02	Switch lever A	1
52	630-1332-07	Side panel R	1
53	630-1333-04	Side panel L	1
54	630-1367-01	Plunger arm	1
55	630-1368-00	FF lever	1
56	630-1369-01	Brake L plate	1
57	630-1370-00	Switch plate	1
58	630-1371-01	Head P-L plate	1
59	631-0314-00	Thrust plate	2
60	631-0343-00	Idler gear	2
61	631-0345-03	Cam gear	1
62	631-0351-01	Brake shoe	2
63	632-0871-00	Spacer	1
64	632-1069-02	Head L roller	1
65	714-2004-81	Machine screw (M2x4)	3
66	714-2603-81	Machine screw (M2.6x3)	2
67	714-2604-81	Machine screw (M2.6x4)	16
68	716-0429-00	Machine screw	1
69	716-0347-00	Machine screw	2
70	714-2604-11	Machine screw (M2.6x4)	2
71	743-1200-10	E-ring (M1.2)	3
72	743-1500-10	E-ring (M1.5)	12
73	743-2000-10	E-ring (M2.0)	15
74	743-2500-10	E-ring (M2.5)	4
75	745-0586-00	Washer	2
76	746-0622-01	Washer	1
77	746-0624-00	Washer	3
78	746-0628-01	Washer	5
79	746-0688-01	Washer	2
80	746-0621-00	Washer	1
81	750-2107-00	Spring	1
82	750-1910-00	Spring	1
83	750-2049-00	Spring	1
84	750-2050-00	Spring	2
85	750-2051-00	Spring	1
86	750-2052-03	Spring	1
87	750-2053-01	Spring	1
88	750-2054-01	Spring	1
89	750-2056-03	Spring	1
90	750-2057-02	Spring	1
91	750-2059-01	Spring	1
92	750-2061-01	Spring	1
93	750-2062-00	Spring	1
94	750-2063-02	Spring	1
95	750-2093-02	Spring	1
96	750-2101-00	Spring	1
97	750-2102-01	Spring	1
98	750-2103-00	Spring	1
99	750-2104-01	Spring	1
100	750-2105-00	Spring	1
101	750-2106-00	Spring	1
102	013-3580-00	Switch	1
103	013-3666-00	Switch	1
104	630-1688-00	Switch lever	1
105	714-2005-81	Machine screw (M2x5)	1
106	610-0105-00	R-P roller	1
107	716-0479-00	Machine screw	2
108	750-2171-00	Spring	1

■Multi Seat Remote Control Units:

RCA-194-100 RCA-195-100

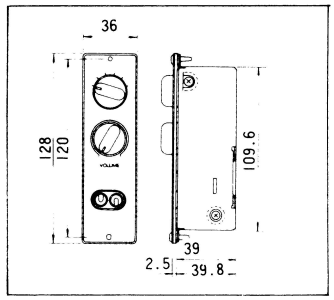

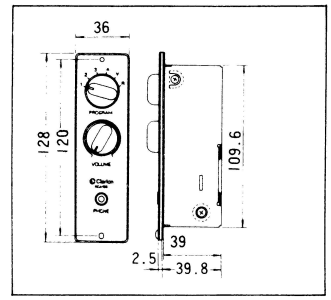

■EXPLODED VIEW • PARTS LIST:

◎Main section

◎RCA-194-100, RCA-195-100

N.B □ is use only RCA-194-100 ■ is use only RCA-195-100

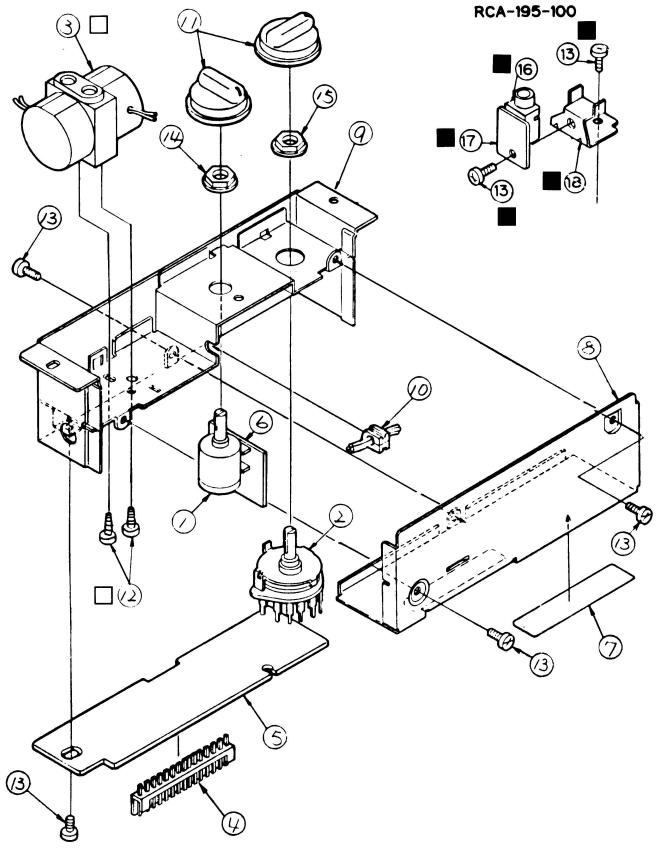

REF.NO.	PART NO. (ORDER NO.)		DESCRIPTION	Q'TY
1	012-4406-00		Variable resistor	1
2	013-3787-01		Switch	1
3	060-0117-00	□	Driver	1
4	076-0232-15		Plug (15P)	1
5	099-7529-01		P.W.B	1
6	099-7530-00		P.W.B	1
7	286-5704-00 286-5705-00	□ ■	Set plate RCA-194-100 RCA-195-100	1
8	305-0224-00		Side cover	1
9	312-0260-00		Chassis	1
10	345-4177-00		Grommet	1
11	380-4722-00		Knob	2
12	716-0682-00	□	Tapping screw (3x8)	2
13	731-3006-81		Tap tight (M3x6)	4□ 6■
14	722-0368-00		Nut (M7)	1
15	722-0370-00		Nut (M9)	1
16	075-0240-00	■	Jack	1
17	099-7531-00	■	P.W.B holder	1
18	330-8347-00	■	P.W.B holder	1
	371-3308-00	□	Escutcheon	1
	371-3309-00	■	Escutcheon	1

■CIRCUIT DIAGRAM:

◎RCA-194-100, RCA-195-100

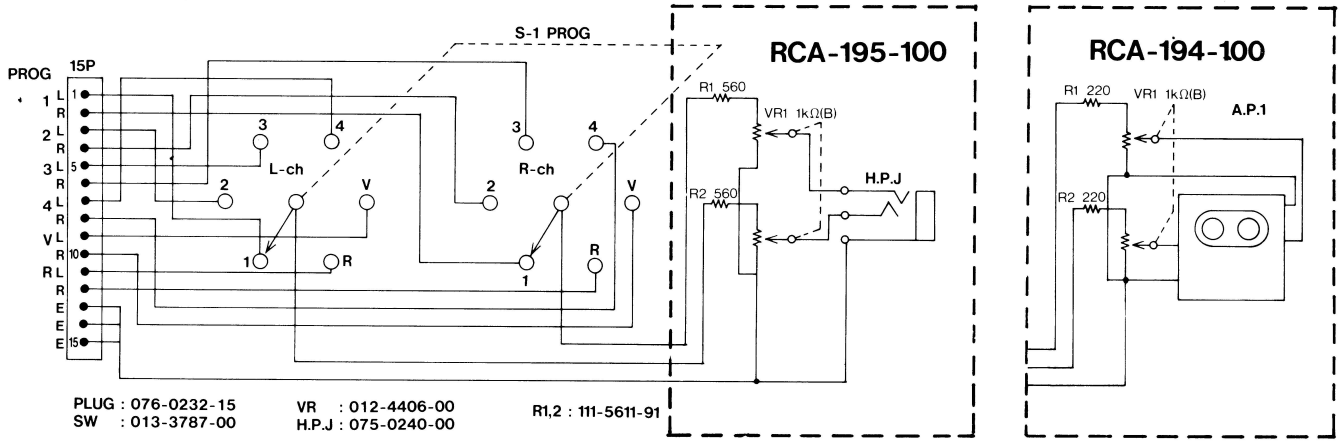

■Multi Controller: RCA-196-100

■CIRCUIT DIAGRAM:

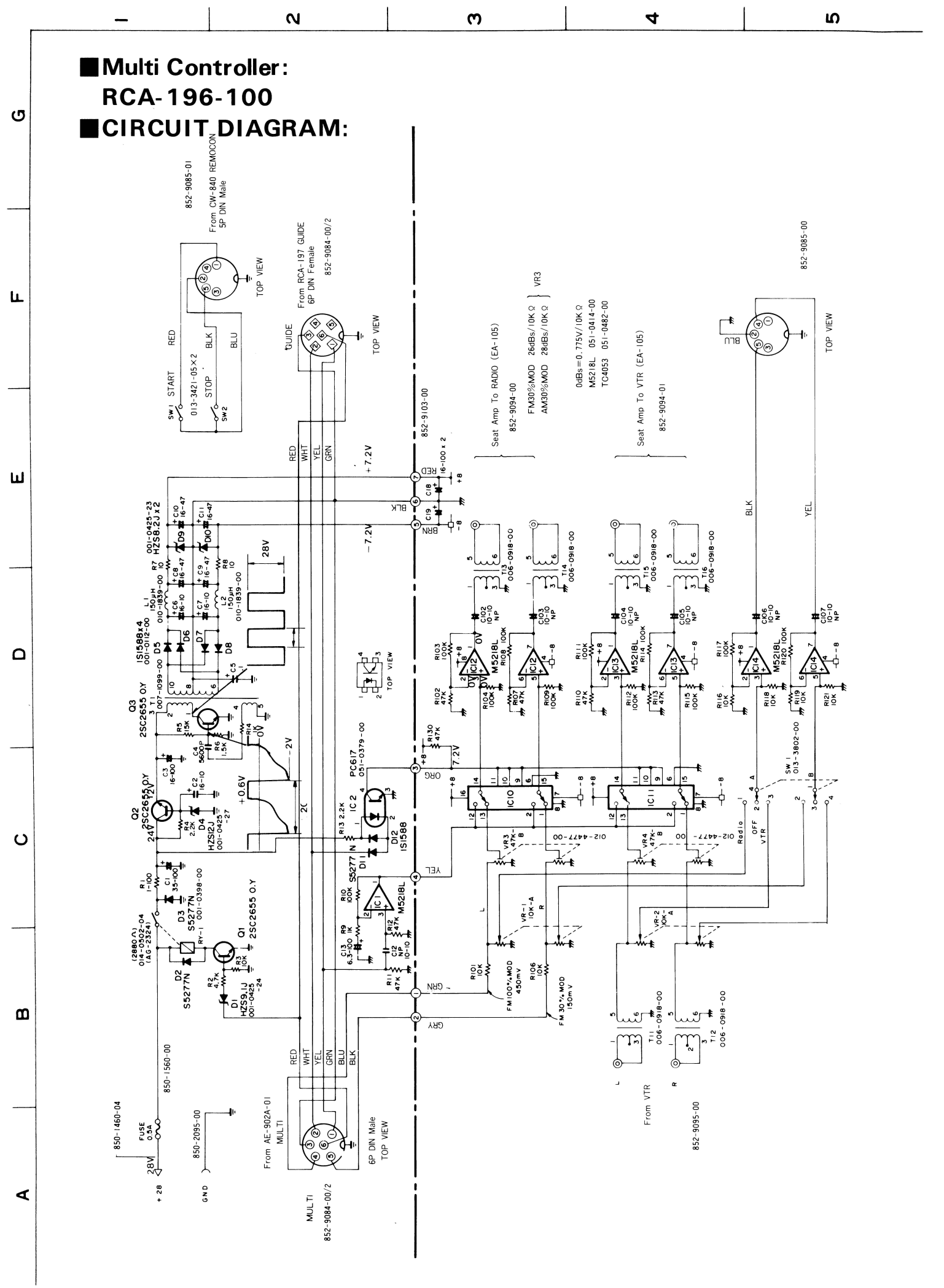

■PRINTED WIRING BOARD:

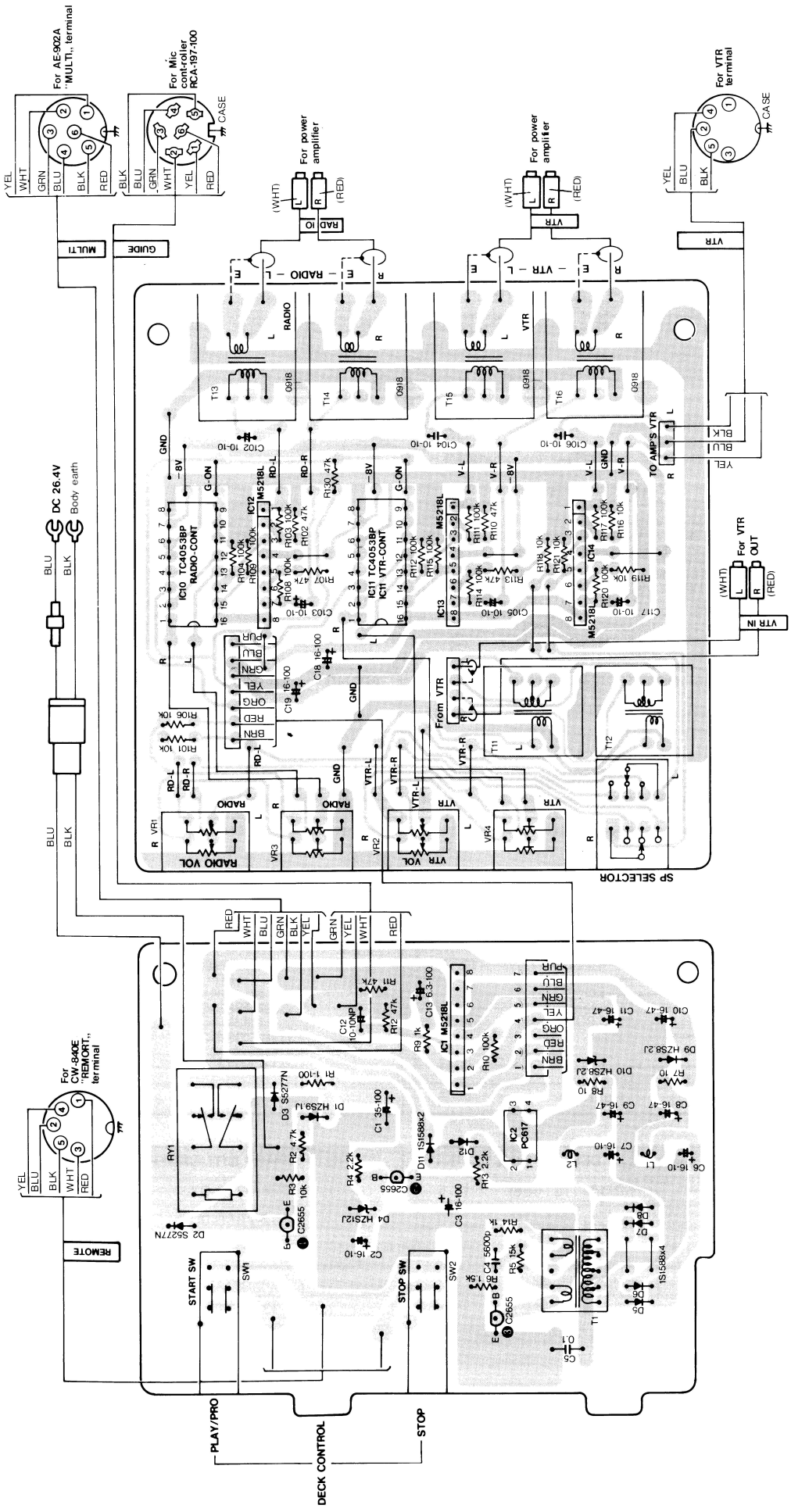

■EXPLODED VIEW • PARTS LIST: RCA-196-100

◎Main section

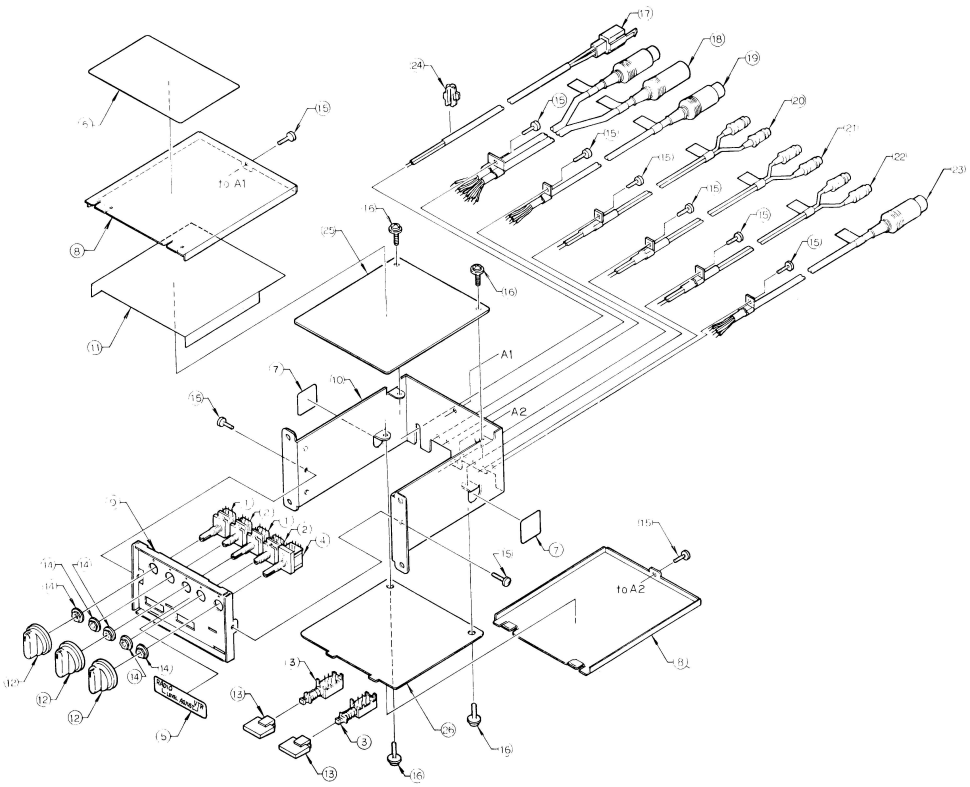

REF.NO.	PART NO. (ORDER NO.)	DESCRIPTION	Q'TY
1	012-4372-00	Variable resistor (10kΩ A)	2
2	012-4477-00	Variable resistor (50kΩ B)	2
3	013-3421-05	Switch	2
4	013-3802-00	Switch	1
5	285-1237-00	Guide label	1
6	285-1238-00	Guide label	1
7	290-3542-00	Label	2
8	303-0335-00	Upper cover	2
9	309-0553-00	Front plate	1
10	312-0271-00	Chassis	1
11	347-2045-00	Insulator	1
12	380-4722-00	Knob	3
13	382-0449-07	Button	2
14	722-0368-00	Nut (M7)	5

REF.NO.	PART NO. (ORDER NO.)	DESCRIPTION	Q'TY
15	731-3005-81	Tap tight (M3x5)	10
16	735-3008-11	D-sems screw (M3x8)	4
17	852-8038-01	Extension lead	1
18	852-9084-00	Extension lead (MULTI, GUIDE)	1
19	852-9085-01	Extension lead (REMORT)	1
20	852-9094-00	Extension lead (VTR)	1
21	852-9094-01	Extension lead (RADIO)	1
22	852-9095-00	Extension lead (VTR IN)	1
23	852-9085-00	Extension lead (VTR)	1
24	335-0580-00	Clamp	1
25	099-7683-00	P.W.B	1
26	099-7684-00	P.W.B	1
	371-3354-00	Escutcheon	1

◎Electrical section

REF.NO.	PART NO. (ORDER NO.)	DESCRIPTION	Q'TY
$D_{5,6,7,8,12}$	001-0112-00	Diode (1S1588)	5
$D_{2,3,11}$	001-0398-00	Diode (S5277N)	3
$D_{9,10}$	001-0425-23	Diode (HZS8.2J)	2
D_1	001-0425-24	Diode (HZS9.1J)	1
D_4	001-0425-27	Diode (HZS12J)	1
$T_{11\sim16}$	006-0918-00	Input trans(10k-10k)	6
T_1	007-1099-00	Output trans(DC-DC)	1
$L_{1,2}$	010-1839-00	Coil (150μH)	2
RY_1	014-0502-04	Relay	1
IC_2	051-0379-00	IC (PC617)	1
$IC_{1,12,13,14}$	051-0414-00	IC (M5218L)	4
$IC_{10,11}$	051-0482-00	IC (TC4053BP)	2

REF.NO.	PART NO. (ORDER NO.)	DESCRIPTION	Q'TY
	076-0232-07	Plug (7P)	1
$Q_{1,2,3}$	102-2655-00	Transistor (2SC2655)	3
R_1	114-1011-11	Film resistor (1W100Ω) OM	1
C_5	173-1041-10	Polyester capacitor (0.1μF) S	1
C_4	173-5621-10	Polyester capacitor (5600pF) S	1
$C_{2,6,7}$	179-1063-32	Electrolytic capacitor (16V10μF) S	3
$C_{18,19}$	179-1073-33	Electrolytic capacitor (16V100μF) S	2
C_1	179-1073-52	Electrolytic capacitor (35V100μF) S	1
$C_{12,102,103,104,105,106,107}$	182-1066-22	Electrolytic capacitor (10V10μF NP) SS	7
C_{13}	182-1073-12	Electrolytic capacitor (6.3V100μF) SS	1
C_3	182-1073-32	Electrolytic capacitor (16V100μF) SS	1
$C_{8,9,10,11}$	182-4763-32	Electrolytic capacitor (16V47μF) SS	4

■Terminal Board:
RCA-198-100

■EXPLODED VIEW • PARTS LIST:
◎Main section

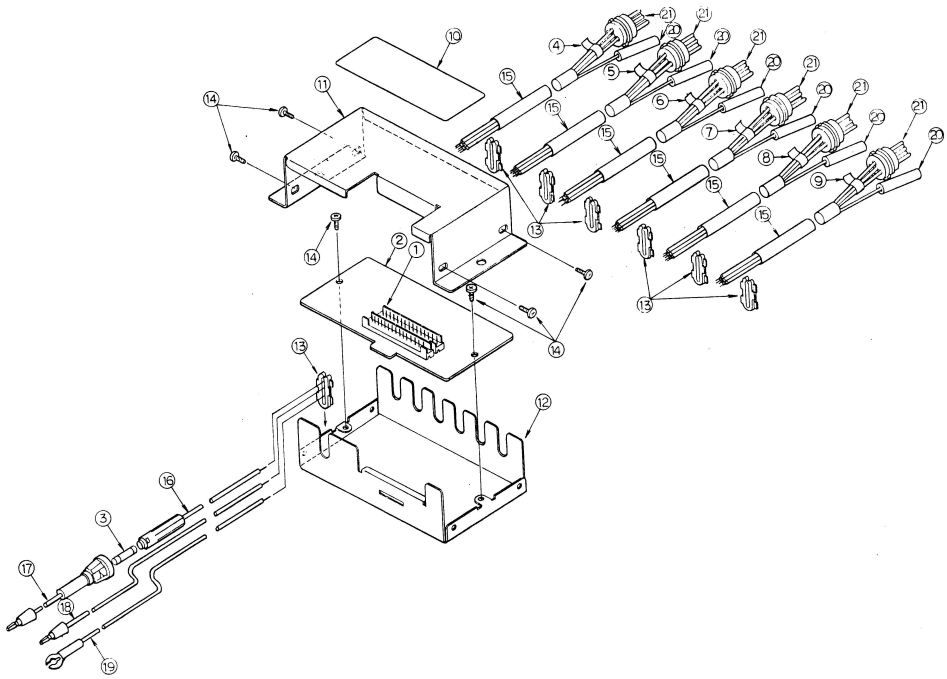

REF.NO.	PART NO. (ORDER NO.)	DESCRIPTION	Q'TY
1	076-0232-15	Plug (15P)	2
2	099-7674-00	P.W.B	1
3	120-0005-00	Fuse (0.5A)	1
4	287-1473-00	Name plate (RADIO)	1
5	287-1524-00	Name plate (VTR)	1
6	287-1486-00	Name plate (4)	1
7	287-1485-00	Name plate (3)	1
8	287-1484-00	Name plate (2)	1
9	287-1483-00	Name plate (1)	1
10	285-1246-00	Guide label	1
11	310-1278-00	Upper case	1

REF.NO.	PART NO. (ORDER NO.)	DESCRIPTION	Q'TY
12	311-1242-00	Lower case	1
13	335-0580-00	Clamp	7
14	731-3005-81	Tap tight (M3x5)	6
15	820-0250-08	Vinyl tube (φ8x250)	1
16	850-1560-00	A-lead	1
17	850-1460-04	A-lead	1
18	850-2353-00	A-lead (ACC)	1
19	850-2095-00	A-lead	1
20	852-9102-00	Extension lead	6
21	852-9097-00	Extension lead	6

■CIRCUIT DIAGRAM:

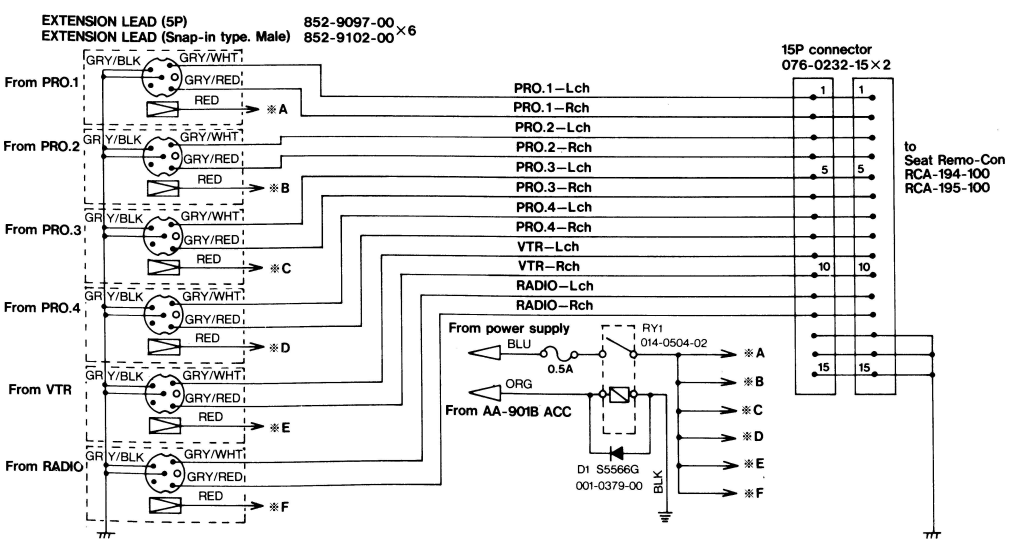

■Microphone Control Unit:
RCA-197-100

■EXPLODED VIEW • PARTS LIST:
◎Main section

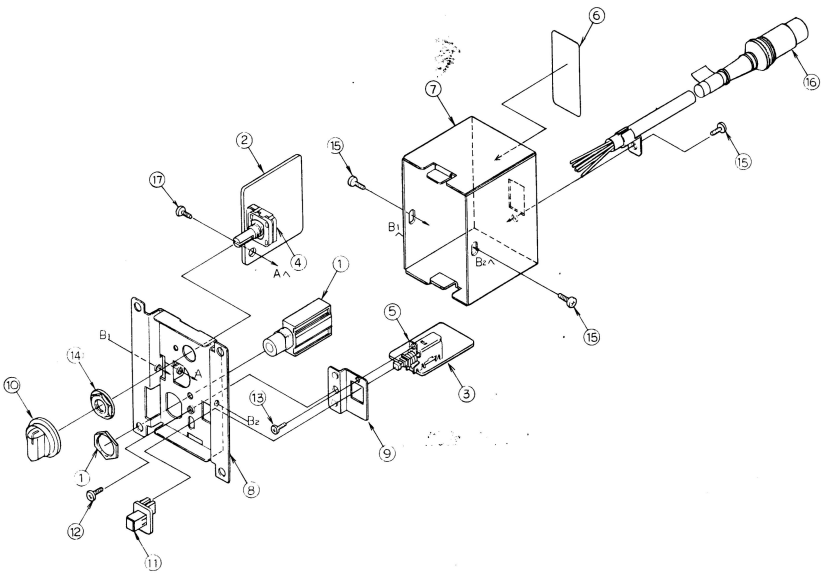

REF.NO.	PART NO. (ORDER NO.)	DESCRIPTION	Q'TY
1	075-0177-04	Jack	1
2	099-7672-00	P.W.B	1
3	099-7673-00	P.W.B	1
4	012-4478-00	Variable resistor (10kΩ A)	1
5	013-3490-01	Switch	1
6	286-5789-00	Set plate	1
7	307-0399-00	Rear cover	1
8	309-0554-00	Front plate	1
9	330-8452-00	Switch holder	1

REF.NO.	PART NO. (ORDER NO.)	DESCRIPTION	Q'TY
10	380-4722-00	Knob	1
11	382-0847-01	Button	1
12	714-3005-80	Machine screw (M3x5)	1
13	714-2005-81	Machine screw (M2x5)	1
14	722-0368-00	Nut (M7)	1
15	731-3005-81	Tap tight (M3x5)	3
16	852-9086-00	Extension lead (DIN 6P)	1
17	735-3008-11	D-sems screw (M3x8)	1
	371-3358-00	Escutcheon ass'y	1

■PARTS LIST: ◎Electrical section

REF.NO.	PART NO. (ORDER NO.)	DESCRIPTION	Q'TY
S_2	013-3678-00	Switch (3P)	1
Q_1	102-2240-00	Transistor (2SC2240GR,BL)	1
Q_2	102-1815-00	Transistor (2SC1815)	1
C_5	160-2212-05	Ceramic capacitor (50V220pF) HD	1
C_4	172-4742-20	Polyester capacitor (63V0.47μF) SS	1

REF.NO.	PART NO. (ORDER NO.)	DESCRIPTION	Q'TY
C_1	173-1042-10	Polyester capacitor (50V0.1μF) S	1
C_6	179-1063-32	Electrolytic capacitor (16V10μF) S	1
$C_{2,3}$	179-4763-42	Electrolytic capacitor (25V47μF) S	2
C_7	182-2263-42	Electrolytic capacitor (25V22μF) SS	1
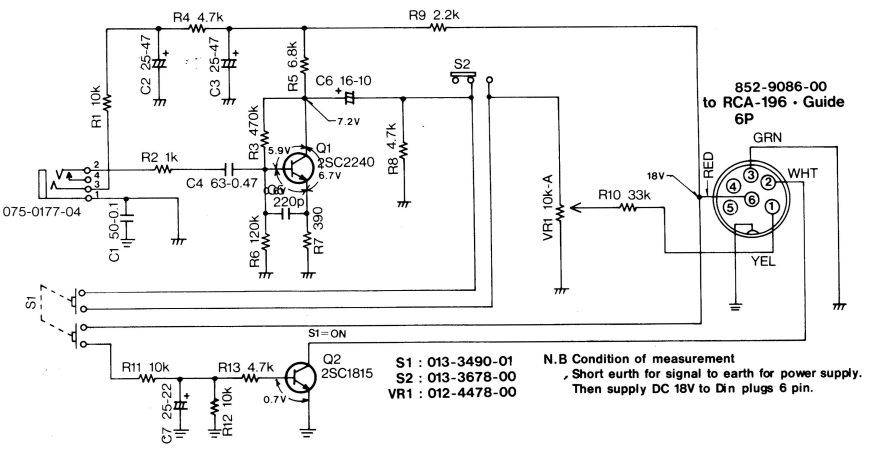
■CIRCUIT DIAGRAM: